TOWN OF SCITUATE, MASSACHUSETTS
453 CHIEF JUSTICE CUSHING HIGHWAY
STEARNS MEADOW DRINKING WATER TREATMENT PLANT

SITE PLAN APPROVAL

AUGUST 10, 2023

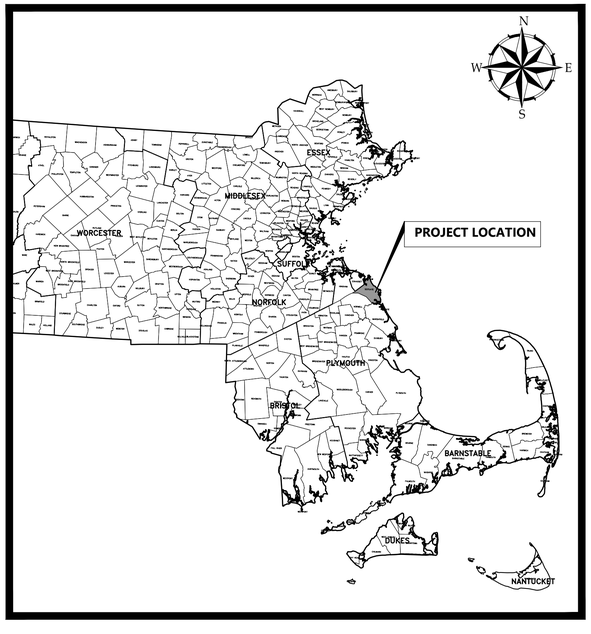

PROJECT LOCATION MAP

SHEET INDEX	
Sheet Title	**Sheet Description**
G-000	COVER SHEET
G-001	GENERAL NOTES, ABBREVIATIONS & LEGENDS
G-002	KEY PLAN
C-201	EROSION & SEDIMENT CONTROL PLAN
C-202	EROSION & SEDIMENT CONTROL PLAN
C-203	EROSION & SEDIMENT CONTROL PLAN
C-300	OVERALL SITE LAYOUT PLAN
C-301	SITE LAYOUT PLAN
C-302	SITE LAYOUT PLAN
C-400	OVERALL GRADING & DRAINAGE PLAN (WITH PIPING)
C-401	GRADING & DRAINAGE PLAN
C-402	GRADING & DRAINAGE PLAN
C-403	GRADING & DRAINAGE PLAN
C-500	OVERALL UTILITIES PLAN
C-501	UTILITIES PLAN
C-502	UTILITIES PLAN
C-900	CIVIL DETAILS 1
C-901	CIVIL DETAILS 2
C-902	CIVIL DETAILS 3
C-903	CIVIL DETAILS 4
C-904	CIVIL DETAILS 5

SUPPLEMENTAL PLANS	
SHEET TITLE	**SHEET DESCRIPTION**
	EXISTING CONDITIONS PLAN BY FELDMAN LAND SURVEYORS
	APPROVAL NOT REQUIRED PLAN BY FELDMAN LAND SURVEYORS
EL-2-101	ELECTRICAL LIGHTING PLAN
L-101	LANDSCAPE PLANTING PLAN
L-901	PLANTING DETAILS
V-101	VEHICLE TURNING PLAN (WB-50)
V-102	VEHICLE TURNING PLAN (FIRE TRUCK)

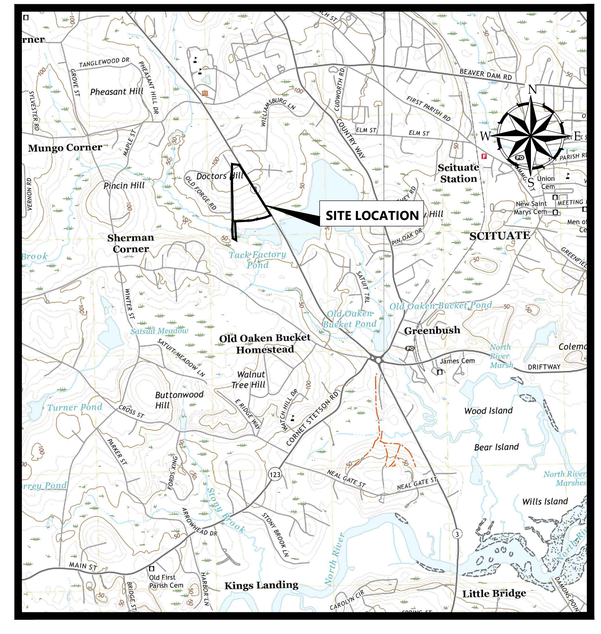

SITE LOCATION MAP

SOURCE: USGS TOPO QUADRANGLE

NOT TO SCALE

Woodard & Curran
250 Royall Street Suite 200E
Canton, Massachusetts 02021
800.446.5518 | www.woodardcurran.com

THIS DOCUMENT IS THE PROPERTY OF WOODARD & CURRAN AND ITS CLIENT. REPRODUCTION OR MODIFICATION WITHOUT WRITTEN PERMISSION IS PROHIBITED.

THE PURPOSE OF THESE PLANS IS FOR SUBMITTAL FOR SITE PLAN APPROVAL UNDER THE TOWN OF SCITUATE ZONING REGULATIONS.

PE SEAL:

COMMONWEALTH OF MASSACHUSETTS
KEVIN A. MCCAFFERY
No. 46778
REGISTERED PROFESSIONAL ENGINEER

ISSUE FOR PERMIT

CLIENT INFO:
TOWN OF SCITUATE, MASSACHUSETTS
453 CHIEF JUSTICE CUSHING HIGHWAY

STEARNS MEADOW DRINKING WATER TREATMENT PLANT

REV	MM/DD/YY	DESCRIPTION

JOB NO:	0233681.02
DATE:	AUGUST 10, 2023
SCALE:	AS SHOWN
DESIGNED BY:	JC
DRAWN BY:	MB
CHECKED BY:	SK/KM
FILENAME:	023368102-G-000.dwg

DRAWING TITLE:

COVER SHEET

DRAWING NO:

G-000

24x36
PLOT SCALE: 10:

\\woodardcurran.net\shared\Projects\0233681.02 scituate ma stearns meadow wtp - design\wip\Drawings\General\PERMITTING\023368102-G-000.dwg, Aug 09, 2023 - 6:16pm MBRCWN

GENERAL NOTES

1. SURFACE EXISTING CONDITIONS DEPICTED HEREIN, ARE BASED ON A SURVEY PERFORMED BY FELDMAN LAND SURVEYORS, 152 HAMPDEN STREET, BOSTON, MA 02119, ENTITLED "EXISTING CONDITIONS PLAN, 443–461 CHIEF JUSTICE CUSHING HIGHWAY, SCITUATE, MA", DATED 3/14/2022.
2. BENCH MARK USED:

   ELEVATIONS WERE OBTAINED BY GPS OBSERVATIONS ON DECEMBER 8, 2021.

   TEMPORARY BENCH MARKS SET:

   TBM–JC–1: X–CUT ON LEFT FRONT BOLT OVER OUTLET OF HYDRANT ON NORTH OF DOCTORS HILL ROAD. 1.8' ABOVE GRADE. ELEVATION = 106.87

   TBM–JC–2: X–CUT ON LEFT FRONT BOLT OVER OUTLET OF HYDRANT IN FRONT OF 439 CUSHING HIGHWAY.
3. THE HORIZONTAL DATUM DEPICTED ON THE MAPS HEREON IS BASED ON THE MASSACHUSETTS STATE PLANE COORDINATE SYSTEM, MAINLAND ZONE REFERENCED TO THE NORTH AMERICAN DATUM OF 1983. THE VERTICAL DATUM IS BASED ON THE NORTH AMERICAN VERTICAL DATUM OF 1988 (NAVD 88).
4. WETLAND DELINEATION WAS PREPARED BY LEC ENVIRONMENTAL CONSULTANTS, INC. IN 2022 AND FIELD SURVEYED BY FELDMAN LAND SURVEYORS.
5. COORDINATE CONSTRUCTION ACTIVITY WITH UTILITY COMPANIES, EMERGENCY SERVICES AND THE TOWN. CONTRACTOR SHALL NOTIFY ALL UTILITIES PRIOR TO COMMENCING WORK, ALLOWING SUFFICIENT TIME TO LOCATE AND MARK THE LOCATION OF BURIED UTILITIES. CONTRACTOR SHALL CONTACT "DIG SAFE", PRIOR TO EXCAVATION. CALL, TOLL FREE, THE DIG SAFE CALL CENTER AT 1–888–344–7233 SEVENTY–TWO HOURS PRIOR TO EXCAVATION.
6. ALL DISTURBANCES WITHIN PUBLIC ROADWAYS SHALL BE RESTORED TO SPECIFIED MASSDOT REQUIREMENTS, SEE MASSDOT CONSTRUCTION ACCESS PERMIT. RESTORE ALL OTHER NON–LAWN AREAS DISTURBED BY CONTRACTOR'S OPERATIONS TO ORIGINAL FINISH (GRAVEL, PAVEMENT, ETC.) UNLESS NOTED OTHERWISE ON THE PLANS. RESTORATION OF PAVED SURFACES, GRAVEL SURFACES, AND DRIVEWAYS, DAMAGED BY CONSTRUCTION ACTIVITIES SHALL BE PERFORMED AT NO ADDITIONAL COST TO OWNER.
7. PROPERLY PROTECT AND DO NOT DISTURB PROPERTY IRONS AND MONUMENTS. IF DISTURBED, THE PROPERTY MONUMENT SHALL BE RESET AT THE CONTRACTOR'S EXPENSE BY A LICENSED LAND SURVEYOR ACCEPTABLE TO THE TOWN.
8. ALL TREES NOT NOTED TO BE REMOVED SHALL BE PROTECTED BY CONTRACTOR DURING CONSTRUCTION. CONTRACTOR SHALL NOTIFY OWNER IF ANY TREES NOT IDENTIFIED FOR REMOVAL ARE FOUND TO BE IN CONFLICT WITH THE WORK.
9. THE CONTRACTOR SHALL SUBMIT A PROPOSED TRAFFIC CONTROL PLAN TO THE TOWN ENGINEER AND MASSDOT BEFORE BEGINNING CONSTRUCTION. THE TRAFFIC CONTROL PLAN SHALL PROVIDE FOR SAFE MOVEMENT OF BOTH VEHICLES AND PEDESTRIANS DURING CONSTRUCTION ACTIVITIES. THE PROPOSED TRAFFIC CONTROL PLAN SHALL BE SUBJECT TO APPROVAL BY THE TOWN ENGINEER AND MASSDOT, WHO MAY ATTACH SPECIAL CONDITIONS TO, OR REQUIRE MODIFICATIONS OF, THE TRAFFIC CONTROL PLAN.
10. DO NOT PARK, ENTER, IMPEDE ACCESS TO, OR STORE EQUIPMENT BEYOND LIMIT OF WORK, UNLESS PERMISSION HAS BEEN GRANTED IN WRITING BY THE ENGINEER.
11. COORDINATE DISRUPTION OF PRIVATE UTILITY SERVICES WITH LANDOWNERS AT LEAST TWO DAYS (48 HOURS) PRIOR TO DISRUPTION. ALL UTILITY COORDINATION IS RESPONSIBILITY OF CONTRACTOR.
12. RESTRICT ACCESS TO SITE THROUGH THE USE OF APPROPRIATE SIGNAGE, BARRIERS, FENCES, ETC. SITE SHALL BE LEFT WITH APPROPRIATE SAFETY MEASURES IN PLACE DURING NON–WORKING HOURS. INSTALL ORANGE CONSTRUCTION FENCING AROUND ALL WORK ZONES AT THE END OF EVERY DAY. SITE SAFETY IS THE RESPONSIBILITY OF CONTRACTOR, DURING BOTH WORKING AND NON–WORKING HOURS.
13. ALL DISTURBANCE TO THE SITE SHALL BE WITHIN THE DEFINED LIMIT OF WORK. IF A CONFLICT OR SITE CONDITION REQUIRES THAT THE LIMIT OF WORK BE CHANGED, CONTRACTOR SHALL COORDINATE WITH THE ENGINEER.
14. STAGING AREAS, INCLUDING STOCKPILING OF MATERIALS, SHALL OCCUR FULLY WITHIN THE LIMITS OF WORK. AND BE LOCATED AS FAR AWAY FROM THE WETLAND RESOURCE AREAS AS POSSIBLE.
15. IMPACT WITHIN THE WETLAND BUFFER ZONES SHALL BE MINIMIZED. IF WORK SHALL RESULT IN ADDITIONAL IMPACT WITHIN THE BUFFER ZONE BEYOND WHAT IS SHOWN ON THE DRAWINGS, CONTRACTOR SHALL NOTIFY THE ENGINEER BEFORE DISTURBING THE AREA.
16. CONTRACTOR SHALL BE RESPONSIBLE FOR PROVIDING EROSION AND SEDIMENTATION CONTROL IN ACCORDANCE WITH THE LATEST STATE OF MASSACHUSETTS EROSION & SEDIMENT CONTROL GUIDELINES AND DESIGN DRAWINGS. RECOMMENDED EROSION CONTROL MEASURES ARE SHOWN ON THE PLANS. CONTRACTOR SHALL BE RESPONSIBLE FOR SEQUENCING CONSTRUCTION WITH APPROPRIATE EROSION CONTROL. IF ANY EARTHWORK IS TO BE COMPLETED PRIOR TO INSTALLATION OF SHEET PILE WALL, SEDIMENTATION BARRIER SHALL BE PLACED IN OR NEAR THE LOCATION OF THE SHEET PILE WALL UNTIL IT IS INSTALLED. CONTRACTOR SHALL BE RESPONSIBLE FOR PROVIDING ADDITIONAL EROSION AND SEDIMENT CONTROL, INCLUDING STABILIZED CONSTRUCTION EXITS, WITHIN THE PROJECT AREA AS NECESSARY. ANY ACCUMULATION OF SEDIMENT IN STRUCTURES OR ON THE GROUND DUE TO THE CONSTRUCTION PROJECT SHALL BE REMOVED AND DISPOSED OF IMMEDIATELY BY THE CONTRACTOR AT NO ADDITIONAL COST TO THE OWNER. ALL EROSION CONTROL MEASURES SHALL BE LEFT IN PLACE UNTIL THE RESTORATION IS COMPLETE AND UPON APPROVAL FOR REMOVAL BY THE SCITUATE CONSERVATION COMMISSION.
17. ALL DISTURBED LAWN AREAS WITHIN THE LIMIT OF WORK SHALL BE RESTORED WITH 6 INCHES OF LOAM AND SEED UNLESS OTHERWISE NOTED ON PLANS.
18. TREES AND VEGETATION LOCATED WITHIN THE LIMIT OF WORK, AND ON THE LANDWARD SIDE OF DELINEATED BORDERING VEGETATED WETLANDS OR BANK MAY BE REMOVED AS NECESSARY TO COMPLETE THE WORK UNLESS OTHERWISE NOTED.
19. ADDITIONAL SITE FEATURES (SIGNS, MAILBOXES, LIGHTS, WALLS, ETC.) SHALL BE REMOVED AS REQUIRED TO COMPLETE THE WORK. FOLLOWING COMPLETION OF WORK, SITE FEATURES SHALL BE RE–INSTALLED PER THE DIRECTION OF THE OWNER. ANY SITE FEATURED OUTSIDE OF LIMIT OF WORK SHALL BE PROTECTED, AND IF DISTURBED, SHALL BE REPLACED AT NO ADDITIONAL COST TO OWNER.
20. PRIOR TO THE COMMENCEMENT OF ANY ACTIVITIES ON THIS SITE THERE MUST BE A PRE–CONSTRUCTION MEETING WITH THE TOWN REPRESENTATIVE. THE TOWN REPRESENTATIVE SHALL BE NOTIFIED IN WRITING WHEN EROSION CONTROL AND LIMIT OF WORK FLAGGING HAS BEEN INSTALLED AND IS READY TO BE INSPECTED BY THE TOWN REPRESENTATIVE.
21. ALL DEBRIS, FILL, AND EXCAVATED MATERIALS SHALL BE STOCKPILED IN A LOCATION FAR ENOUGH AWAY FROM THE WETLAND RESOURCE AREA TO PREVENT SEDIMENT FROM ENTERING WETLAND RESOURCE AREA.
22. THE CONTRACTOR SHALL MANAGE AND LEGALLY DISPOSE OFF–SITE ALL EXCESS EXCAVATED MATERIALS, INCLUDING, BUT NOT LIMITED TO, SOIL, ROCK, BOULDERS, WATER, DEMOLITION WASTE, AND DEBRIS THAT CANNOT BE REUSED ON–SITE.
23. THE CONTRACTOR SHALL BE RESPONSIBLE FOR ESTABLISHING ALL LINES, GRADES AND OTHER SURVEY CONTROL TO COMPLETE THE WORK AS SHOWN ON THE DRAWINGS.
24. ALL MATERIAL SHALL BE FURNISHED AND INSTALLED BY CONTRACTOR UNLESS OTHERWISE NOTED.
25. CONTRACTOR IS RESPONSIBLE FOR FIELD VERIFICATION OF ALL DIMENSIONS PRIOR TO START OF CONSTRUCTION.
26. CONTRACTOR SHALL MAINTAIN EROSION CONTROL AND STORMWATER POLLUTION PREVENTION SYSTEMS IN COMPLIANCE WITH THE REQUIREMENTS OF THE MASSACHUSETTS STORMWATER MANUAL EROSION AND SEDIMENT CONTROLS AND SITE SPECIFIC STORMWATER POLLUTION PREVENTION PLAN DURING CONSTRUCTION.
27. ALL PAVEMENT MARKINGS AND SIGNS TO CONFORM TO "MANUAL ON UNIFORM TRAFFIC CONTROL DEVICES", "STANDARD ALPHABETS FOR HIGHWAY SIGNS AND PAVEMENT MARKINGS", AND THE AMERICANS WITH DISABILITIES ACT REQUIREMENTS, LATEST EDITIONS.
28. SEE DETAILS FOR PAVEMENT MARKINGS, SIGNS AND SIGN POSTS.

EROSION AND SEDIMENTATION CONTROL NOTES

THESE MEASURES ARE INTENDED TO PROVIDE GENERAL REQUIREMENTS FOR EROSION AND SEDIMENTATION CONTROL. A NATIONAL POLLUTANT DISCHARGE ELIMINATION SYSTEM (NPDES) STORMWATER POLLUTION PREVENTION PLAN (SWPPP) WILL BE ISSUED PRIOR TO CONSTRUCTION AND MAY REQUIRE ADDITIONAL EROSION AND SEDIMENTATION CONTROL MEASURES. CONTRACTOR SHALL FOLLOW ALL MEASURES REQUIRED FOR THE PROJECT.

THE PURPOSE OF EROSION CONTROLS IS TO PREVENT SEDIMENT FROM MOVING ONTO, AROUND, OR OFF OF THE CONSTRUCTION SITE. PROPERLY INSTALLED AND MAINTAINED EROSION CONTROLS ARE THE PRIMARY DEFENSE AGAINST SEDIMENT POLLUTION. SEDIMENTATION CONTROLS ARE A SECOND LINE OF DEFENSE AGAINST MOVING SEDIMENT. THE PURPOSE IS TO PREVENT SEDIMENT FROM LEAVING THE CONSTRUCTION SITE AND ENTERING ENVIRONMENTALLY SENSITIVE AREAS. RUNOFF CONTROLS ARE USED TO SLOW THE VELOCITY OF CONCENTRATED WATER FLOWS. BY INTERCEPTING AND DIVERTING STORMWATER RUNOFF TO A STABILIZED OUTLET OR TREATMENT BMP, EROSION AND SEDIMENTATION ARE REDUCED. THIS SECTION DESCRIBES THE SET OF MEASURES THAT WILL BE INSTALLED BEFORE AND DURING THE CONSTRUCTION PROJECT TO CONTROL POLLUTANTS IN STORMWATER DISCHARGES THAT WILL OCCUR AT THE SITE. SUCH MEASURES MAY INCLUDE: PERIMETER CONTROLS, STOCK PILE COVERING, STORM DRAIN INLET PROTECTION, CHECK DAMS, AND TEMPORARY SEEDING. PLEASE NOTE: THE OPERATOR SHOULD INITIATE APPROPRIATE STABILIZATION PRACTICES ON ALL DISTURBED AREAS AS SOON AS POSSIBLE BUT NOT MORE THAN THREE (3) DAYS AFTER THE CONSTRUCTION ACTIVITY IN THAT AREA HAS TEMPORARILY OR PERMANENTLY CEASED.

1. MINIMIZE DISTURBED AREAS AND PROTECT NATURAL FEATURES AND SOIL

   AS FAR AS IS PRACTICABLE, EXISTING VEGETATION SHALL BE PROTECTED AND LEFT IN PLACE, IN ACCORDANCE WITH THE CLEARING LIMITS SHOWN ON THE APPROVED PLANS. PRIOR TO ANY LAND DISTURBANCE ACTIVITIES COMMENCING ON THE SITE, THE CONTRACTOR SHALL PHYSICALLY MARK LIMITS OF WORK (LOW) ON THE SITE AND ANY AREAS TO BE PROTECTED WITHIN THE SITE, SO THAT WORKERS CAN CLEARLY IDENTIFY THE AREAS TO BE PROTECTED. THE APPENDED PROJECT DRAWINGS IDENTIFY THE LIMIT OF WORK ALONG WITH AREAS AND OBJECTS TO BE PROTECTED.

2. PHASE CONSTRUCTION ACTIVITY

   PROPER SEQUENCING OF CONSTRUCTION ACTIVITIES IS ESSENTIAL TO MAXIMIZE THE EFFECTIVENESS OF EROSION AND SEDIMENT CONTROL MEASURES. CONSTRUCTION SEQUENCING AND TIMING OF CONSTRUCTION ACTIVITIES WILL INCLUDE:

   2.1. INSTALLATION OF ALL EROSION AND SEDIMENT CONTROLS THAT ARE REQUIRED TO BE IN PLACE AND FUNCTIONAL BEFORE ANY EARTHWORK BEGINS. THIS SHALL BE DONE IN ACCORDANCE WITH THE NPDES SWPPP FOR THIS PROJECT, THE MASSACHUSETTS EROSION AND SEDIMENT CONTROL GUIDELINES FOR URBAN AND SUBURBAN AREAS, AND THE MASSACHUSETTS STORMWATER HANDBOOK. UPON ACCEPTABLE COMPLETION OF SITE PREPARATION AND INSTALLATION OF EROSION AND SEDIMENT CONTROLS, SITE CONSTRUCTION ACTIVITIES MAY COMMENCE. ROUTINE INSPECTION AND MAINTENANCE AND/OR MODIFICATION OF EROSION AND SEDIMENT CONTROLS WHILE EARTHWORK IS BEING DONE IS REQUIRED.

   2.2. UPON COMMENCEMENT OF SITE CONSTRUCTION ACTIVITIES, THE OPERATOR SHALL INITIATE APPROPRIATE STABILIZATION PRACTICES ON ALL DISTURBED AREAS AS SOON AS POSSIBLE BUT NOT MORE THAN THREE (3) DAYS AFTER THE CONSTRUCTION ACTIVITY IN THAT AREA HAS TEMPORARILY OR PERMANENTLY CEASED.

   2.3. FINAL STABILIZATION OF ANY DISTURBED AREAS AFTER EARTHWORK HAS BEEN COMPLETED.

3. PHASED CLEARING/GRUBBING

   ONLY AREAS THAT CAN BE REASONABLY EXPECTED TO HAVE ACTIVE CONSTRUCTION WORK BEING PERFORMED WITHIN 3–DAYS OF DISTURBANCE WILL BE CLEARED/GRUBBED AT ANY ONE TIME. IT IS NOT ACCEPTABLE TO CLEAR AND GRUB THE ENTIRE CONSTRUCTION SITE IF PORTIONS WILL NOT BE ACTIVE WITHIN THE 3– DAY TIME–FRAME. PROPER PHASING OF CLEARING AND GRUBBING ACTIVITIES SHALL INCLUDE TEMPORARY STABILIZATION TECHNIQUES FOR AREAS CLEARED AND GRUBBED THAT WILL NOT BE ACTIVE WITHIN THE 3 DAY TIME FRAME. NO UNDISTURBED AREAS SHALL BE CLEARED OF EXISTING VEGETATION AFTER OCTOBER 15TH OF ANY CALENDAR YEAR OR DURING ANY PERIOD OF FULL OR LIMITED WINTER SHUTDOWN. ALL DISTURBED SOILS EXPOSED PRIOR TO OCTOBER 15 OF ANY CALENDAR YEAR SHALL BE SEEDED OR PROTECTED BY THAT DATE. ANY SUCH AREAS THAT DO NOT HAVE ADEQUATE VEGETATIVE STABILIZATION, AS DETERMINED BY THE SITE OPERATOR OR DESIGNATED INSPECTOR, BY NOVEMBER 15 OF ANY CALENDAR YEAR, MUST BE STABILIZED THROUGH THE USE OF EROSION CONTROL MATTING OR HAY MULCH, IN ACCORDANCE WITH SPECIFICATIONS CONTAINED WITHIN THE MASSACHUSETTS EROSION AND SEDIMENT CONTROL GUIDELINES FOR URBAN AND SUBURBAN AREAS. IF WORK CONTINUES WITHIN ANY OF THESE AREAS DURING THE PERIOD FROM OCTOBER 15 THROUGH APRIL 15, CARE MUST BE TAKEN TO ENSURE THAT ONLY THE AREA REQUIRED FOR THAT DAY'S WORK IS EXPOSED, AND ALL ERODIBLE SOIL MUST BE RESTABILIZED WITHIN 5 WORKING DAYS. CLEARING/GRUBBING SHALL NOT TAKE PLACE DURING A RAIN EVENT IF EROSION IS LIKELY TO OCCUR; NOR SHALL IT OCCUR IF A RAIN EVENT IS FORECASTED AND APPROPRIATE EROSION CONTROLS CANNOT BE INSTALLED PRIOR TO THE STORM. AFTER CLEARING, AND BY THE END OF EACH DAY'S GRUBBING OPERATION, THE SITE OPERATOR SHALL INSTALL EROSION CONTROL MEASURES THAT ARE INDICATED ON THE PLANS OR AS DIRECTED BY THE ENGINEER. SUCH EROSION CONTROL MEASURES SHALL BE INSTALLED IN STRICT ACCORDANCE WITH THE MASSACHUSETTS EROSION AND SEDIMENT CONTROL GUIDELINES FOR URBAN AND SUBURBAN AREAS.

4. MONITORING WEATHER CONDITIONS

   CARE SHALL BE TAKEN TO AVOID HAVING UNSTABILIZED AREAS EXPOSED DURING PRECIPITATION EVENTS. WEATHER FORECASTS SHALL BE ROUTINELY CHECKED, AND IN THE CASE OF AN EXPECTED PRECIPITATION EVENT OF OVER 0.25–INCHES OVER A 24–HOUR PERIOD, ALL BMPS SHALL BE INSPECTED, AND MAINTAINED AS NECESSARY, PRIOR TO THE WEATHER EVENT. DISTURBED SOIL AREAS, MATERIAL STORAGE, AREAS EXPOSED TO PRECIPITATION, AND IN–PLACE EROSION CONTROL MEASURES SHALL BE INSPECTED BY THE CONTRACTOR AND THE ENGINEER A MINIMUM OF ONCE EVERY 7 DAYS, WITHIN 24 HOURS AFTER ANY STORM EVENT GREATER THAN 0.5 INCHES OF RAINFALL, AND AT LEAST ONCE DAILY DURING PROLONGED RAINFALL OR SNOWMELT. DEFICIENCIES IN THE EROSION CONTROL MEASURES IDENTIFIED BY THE INSPECTIONS SHALL BE CORRECTED WITHIN THREE (3) CALENDAR DAYS BY THE CONTRACTOR AT NO ADDITIONAL COST TO THE OWNER. THE WEATHER GAUGE STATION AND WEBSITE THAT SHALL BE UTILIZED TO MONITOR WEATHER CONDITIONS ON THE CONSTRUCTION SITE IS AS FOLLOWS: THE CONTRACTOR CAN MONITOR THE WEATHER CONDITIONS ON WWW.WUNDERGROUND.COM, WWW.WEATHER.COM, OR SIMILAR WEATHER INFORMATION SOURCE. THE LOGAN INTERNATIONAL AIRPORT WEATHER GAUGE OR SIMILAR, REPRESENTATIVE WEATHER GAUGE SHALL BE THE WEATHER GAUGE UTILIZED FOR THIS PROJECT.

5. INITIATING STABILIZATION PROCEDURES

   UPON COMPLETION AND ACCEPTANCE OF SITE PREPARATION AND INITIAL INSTALLATION OF EROSION AND SEDIMENT CONTROLS THE OPERATOR SHALL INITIATE APPROPRIATE STABILIZATION PRACTICES DURING ALL PHASES OF CONSTRUCTION ON ALL DISTURBED AREAS AS SOON AS POSSIBLE BUT NOT MORE THAN THREE (3) DAYS AFTER THE CONSTRUCTION ACTIVITY IN THAT AREA HAS TEMPORARILY OR PERMANENTLY CEASED.

6. CONTROL STORMWATER FLOWING ONTO AND THROUGH THE PROJECT

   STRUCTURAL BMPS ARE USED TO DIVERT FLOWS FROM EXPOSED SOILS, RETAIN OR DETAIN FLOWS, OR OTHERWISE LIMIT RUNOFF AND THE DISCHARGE OF POLLUTANTS FROM EXPOSED AREAS OF THE SITE.

   BMPS SHALL BE INSTALLED AS DEPICTED ON THE APPROVED PLAN SET AND IN ACCORDANCE WITH MASSACHUSETTS EROSION AND SEDIMENT CONTROL GUIDELINES FOR URBAN AND SUBURBAN AREAS OR THE MASSACHUSETTS STORMWATER HANDBOOK.

   THE CONTRACTOR SHALL PROVIDE EROSION CONTROL MEASURES SUCH AS DIVERSION CHANNELS, SEDIMENTATION OR FILTRATION SYSTEMS, BERMS, STAKED HAY BALES, SEEDING, MULCHING OR OTHER SPECIAL SURFACE TREATMENTS AS ARE REQUIRED TO PREVENT SILTING AND MUDDYING OF STREAMS, RIVERS, IMPOUNDMENTS, LAKES, ETC. ALL EROSION CONTROL MEASURES SHALL BE IN PLACE IN AN AREA PRIOR TO ANY CONSTRUCTION ACTIVITY IN THAT AREA.

7. STABILIZE SOILS

   DISTURBED AREAS THAT WILL NOT HAVE ACTIVE CONSTRUCTION ACTIVITY OCCURRING WITHIN THREE (3) DAYS MUST BE STABILIZED USING THE BMPS DEPICTED ON THE APPROVED SWPPP PLAN SET AND IN ACCORDANCE WITH APPLICABLE MEASURES SPECIFIED IN THE MASSACHUSETTS EROSION AND SEDIMENT CONTROL GUIDELINES FOR URBAN AND SUBURBAN AREAS OR THE MASSACHUSETTS STORMWATER HANDBOOK. THE CONTRACTOR SHALL STABILIZE THE DISTURBED SOILS THROUGH SEEDING, HYDROSEEDING, MULCHING AND DUST CONTROL THROUGH USE OF WATER. FOR TURFS AND GRASSES, STABILIZE FINAL GRADED AREAS WITHIN SEVEN DAYS OF GRADE PREPARATION BY PREPARING TOPSOIL AND THEN APPLYING SEED AND MULCH. FOR DUST CONTROL, STABILIZE EXPOSED SOILS DURING DRY WEATHER BY APPLYING WATER SITE–WIDE.

8. PROTECT SLOPES

   SLOPES THAT WILL HAVE CONCENTRATED STORMWATER FLOW MUST BE PROTECTED USING THE BMPS DEPICTED ON THE APPROVED SWPPP PLAN SET AND IN ACCORDANCE WITH THE MASSACHUSETTS EROSION AND SEDIMENT CONTROL GUIDELINES FOR URBAN AND SUBURBAN AREAS OR THE MASSACHUSETTS STORMWATER HANDBOOK. IF THE SLOPE STABILIZATION BMPS FAIL AND EROSION OCCURS, THEN ALTERNATIVE CONTROL MEASURES MAY BE USED UPON APPROVAL OF THE SITE OWNER, WHICH MAY INCLUDE COMPOST FILTER SOCKS, FIBER ROLLS, GRAVEL BAG BERMS, EROSION CONTROL MATS/BLANKETS, AND TEMPORARY VEGETATIVE COVER.

9. PROTECT STORM DRAIN INLETS

   STORM DRAIN INLET PROTECTION MEASURES PREVENT SOIL AND DEBRIS FROM ENTERING STORM DRAIN INLETS. THESE MEASURES ARE USUALLY TEMPORARY AND ARE IMPLEMENTED BEFORE A SITE IS DISTURBED. ALL STORMWATER INLETS AND/OR CATCH BASINS THAT ARE OPERATIONAL DURING CONSTRUCTION AND MAY RECEIVE SEDIMENT–LADEN STORMWATER FLOW FROM THE CONSTRUCTION SITE MUST BE PROTECTED USING ANY OF THE BMPS OUTLINED IN THE MASSACHUSETTS EROSION AND SEDIMENT CONTROL GUIDELINES FOR URBAN AND SUBURBAN AREAS OR THE MASSACHUSETTS STORMWATER HANDBOOK.

   POSSIBLE CONTROL MEASURES THAT MAY BE USED INCLUDE COMPOST FILTER SOCKS, FIBER ROLLS, GRAVEL BAG BERMS, OR CATCH BASIN INSERTS. (PLEASE NOTE: HAYBALE/SILT FENCE PROTECTION MEASURES DO NOT WORK ON PAVED SURFACES). THE CONTRACTOR SHALL PROTECT THE STORM DRAIN INLETS WITH BALED HAY CATCH BASIN INLET PROTECTION DETAIL DEPICTED IN THE CONTRACT DRAWINGS. ALL EROSION CONTROL MEASURES SHALL BE IN PLACE IN AN AREA PRIOR TO ANY CONSTRUCTION ACTIVITY IN THAT AREA.

10. ESTABLISH PERIMETER CONTROLS AND SEDIMENT BARRIERS

    PERIMETER CONTROLS SHALL BE INSTALLED, AND MAINTAINED, AS DEPICTED ON THE APPROVED SWPPP PLAN SET AND IN ACCORDANCE WITH THE MASSACHUSETTS EROSION AND SEDIMENT CONTROL GUIDELINES FOR URBAN AND SUBURBAN AREAS OR THE MASSACHUSETTS STORMWATER HANDBOOK.

    IF THE BALED HAY AND/OR SILT FENCE EROSION CHECKS FAIL TO CONTAIN THE SEDIMENT ON–SITE, THEN ALTERNATIVE CONTROL MEASURES MAY BE SUBSTITUTED WITH APPROVAL OF THE SITE OWNER. SUCH MEASURES MAY INCLUDE (BUT ARE NOT LIMITED TO) COMPOST FILTER SOCKS OR STRAW WATTLES (FIBER ROLLS). THE CONTRACTOR SHALL ESTABLISH PERIMETER CONTROLS AND SEDIMENT BARRIERS AT LEAST 48 HOURS BEFORE SITE CLEARING AND SOIL DISTURBANCE. THE SEDIMENT CONTROLS SHALL BE DOWNHILL OF DISTURBED AREAS IN ACCORDANCE WITH THE DETAILS DEPICTED IN THE DRAWINGS. ALL EROSION CONTROL MEASURES SHALL BE IN PLACE IN AN AREA PRIOR TO ANY CONSTRUCTION ACTIVITY IN THAT AREA.

11. RETAIN SEDIMENT ON–SITE AND CONTROL DEWATERING PRACTICES

    SEDIMENT TRAPS, BASINS, AND BARRIERS ARE USED TO RETAIN SEDIMENT ON THE SITE TO PROTECT STREAMS, LAKES, DRAINAGE SYSTEMS, AND ADJACENT PROPERTY. THESE DEVICES ARE USED AT THE OUTLETS OF CHANNELS, DIVERSIONS, AND OTHER RUNOFF CONVEYANCE MEASURES TO ALLOW SEDIMENT–FILLED WATER TO POOL AND THE SEDIMENT TO SETTLE. THESE MEASURES ARE OFTEN USED AS THE LAST LINE OF DEFENSE TO STOP SEDIMENT FROM LEAVING THE SITE. DISCHARGE OF SEDIMENT–LADEN WATER INTO STORM DRAINS, STREAMS, RIVERS, LAKES OR WETLANDS PRIOR TO SEDIMENT REMOVAL IS PROHIBITED. A TEMPORARY SEDIMENT TRAP OR BASIN MAY BE INSTALLED AND MAINTAINED AS NECESSARY WITHIN THE SITE BOUNDARIES AND IN ACCORDANCE WITH THE MASSACHUSETTS EROSION AND SEDIMENT CONTROL GUIDELINES FOR URBAN AND SUBURBAN AREAS OR THE MASSACHUSETTS STORMWATER HANDBOOK.

GRADING AND DRAINAGE NOTES:

1. PROPOSED DRAINAGE STRUCTURES SHALL BE SET TO CORRESPOND TO THE PROPOSED ELEVATIONS SHOWN ON THE DRAWINGS. ANY CONFLICTS AND OR DISCREPANCIES AND SHALL NOTIFY THE ENGINEER IN WRITING.
2. UNSUITABLE FILL AND BACKFILL MATERIALS ARE MATERIALS CONTAINING EXCESSIVE AMOUNT OF WATER, PLASTIC, CLAY, SILT, VEGETATION, ORGANIC MATTER, DEBRIS, PAVEMENT, STONES OR BOULDERS OVER 6 INCHES IN GREATEST DIMENSION, FROZEN MATERIAL, AND MATERIAL WHICH, IN THE OPINION OF THE ENGINEER, WILL NOT PROVIDE A SUITABLE FOUNDATION OR SUBGRADE.
3. SUITABLE SOIL SHALL BE PLACED IN LAYERS TO THE REQUIRED ELEVATIONS AS SHOWN ON THE DRAWINGS. FILL, BACKFILL AND COMPACT TO PRODUCE MINIMUM SUBSEQUENT SETTLEMENT OF THE MATERIAL AND PROVIDE ADEQUATE SUPPORT FOR THE SURFACE TREATMENT OR STRUCTURE TO BE PLACED ON THE MATERIAL. PLACE MATERIAL IN APPROXIMATELY HORIZONTAL LAYERS OF BEGINNING AT LOWEST AREA TO BE FILLED. DO NOT IMPAIR DRAINAGE. DO NOT USE ON–SITE TOPSOIL AS FILL MATERIAL.
4. FOR GROUND SURFACE PREPARATION, REMOVE VEGETATION, DEBRIS, UNSUITABLE SOIL MATERIALS, OBSTRUCTIONS, AND DELETERIOUS MATERIALS FROM GROUND SURFACE PRIOR TO PLACEMENT OF FILL. REMOVE MATERIAL TO THE FULL EXTENT OF ROOT PENETRATION. PROOF–ROLL EXISTING GROUND SURFACE PRIOR TO PLACEMENT OF FILL TO PROVIDE A DENSE, STABLE BASE FOR THE FIRST LIFTS OF THE FILL.
5. PRIOR TO THE START OF CONSTRUCTION, HAND DIG TEST PITS TO VERIFY THE LOCATION OF ALL EXISTING UNDERGROUND UTILITIES. CONTRACTOR SHALL VERIFY LOCATION, PIPE MATERIAL, AND ELEVATION OF ALL EXISTING UTILITIES AT PROPOSED UTILITY CROSSINGS, AND ADVISE THE ENGINEER IN WRITING OF ANY DISCREPANCIES.
6. ALL PROPOSED UTILITIES AND THEIR CONNECTIONS, DISCONNECTION AND RELOCATION OF EXISTING UTILITIES SHALL BE COMPLETED IN ACCORDANCE WITH THE REQUIREMENTS OF THE UTILITY OWNER HAVING JURISDICTION. ANY COORDINATION WITH THE MUNICIPALITY AND/OR UTILITY OWNER, PERMITS, FEES, OR APPROVALS REQUIRED SHALL BE THE RESPONSIBILITY OF THE CONTRACTOR.
7. EROSION CONTROL BARRIERS SHALL BE INSTALLED PRIOR TO COMMENCING ANY WORK ON THE SITE. KEEP ALL STREETS FREE OF DUST, MUD, AND DEBRIS, STREETS AND WALKWAYS SHALL BE SWEPT REGULARLY, AND TEMPORARY CONSTRUCTION ENTRANCE–EXITS SHALL BE UTILIZED DURING CONSTRUCTION.
8. MAINTAIN VEHICULAR AND PEDESTRIAN FLOW ALONG ROUTE 3A AT ALL TIMES DURING CONSTRUCTION. COORDINATE ALL TRAFFIC CONTROL AS WELL AS ANY SIDEWALK OR LANE CLOSURES WITH THE TOWN AND MASSDOT AS REQUIRED. OBTAIN WRITTEN APPROVAL FROM THE OWNER IN ADVANCE FOR ANY PROPOSED ROAD CLOSURES AS REQUIRED TO COMPLETE THE WORK. COORDINATE AND PROVIDE POLICE DETAILS AS REQUIRED, AT NO ADDITIONAL COST TO THE OWNER.
9. CONTRACTOR IS RESPONSIBLE FOR OBTAINING ALL NECESSARY CONSTRUCTION AND BUILDING PERMITS. PERMIT APPLICATIONS SHALL BE SUBMITTED WITH ADEQUATE TIME SO AS NOT TO DELAY CONSTRUCTION.

LEGEND

DESCRIPTION	EXISTING	PROPOSED
PROPERTY LINE		
FLOOD PLAIN & WATERSHED PROTECTION DISTRICT		
BANK BOUNDARY OF POND		
WETLAND LINE		
WETLAND BUFFER LINE		
MassDOT BASE LINE	150+00	
CONTOUR (MAJOR)	80	80
CONTOUR (MINOR)	81	81
STORM DRAIN	D	SD
SANITARY SEWER	S S	S S
FORCE MAIN LINE		FM
WATER LINE	W	W
ELECTRIC LINE	E	E
OVERHEAD ELECTRIC	OE	OE
EDGE OF VEGETATION		
CLEANOUT		
STORM DRAIN MANHOLE	D	D
CATCH BASIN		
INLET PROTECTION		
UTILITY POLE		
SIGN		
SPOT GRADE	×110.60	+93.83
STONE WALL		
EDGE OF PAVEMENT		
CURB		
BUILDING		
BITUMINOUS CONCRETE		
GRAVEL/RIP RAP		
RETAINING WALL		
CHAIN LINK FENCE		
LIMIT OF WORK		LW
SILT SOCK		
DIVERSION DITCH		
SOIL STOCKPILE		
SNOW STORAGE		
ROOF DRAIN		RD
UNDERDRAIN		UD
HYDRANT		
LIGHTPOST		
DOWNSPOUT		
ROCK CHECK DAM		

Woodard & Curran
250 Royall Street Suite 200E
Canton, Massachusetts 02021
800.446.5518 | www.woodardcurran.com

THIS DOCUMENT IS THE PROPERTY OF WOODARD & CURRAN AND ITS CLIENT. REPRODUCTION OR MODIFICATION WITHOUT WRITTEN PERMISSION IS PROHIBITED.

PE SEAL:

COMMONWEALTH OF MASSACHUSETTS
KEVIN A. MCCAFFERY
CIVIL
No. 46778
REGISTERED PROFESSIONAL ENGINEER

ISSUE FOR PERMIT

CLIENT INFO:

TOWN OF SCITUATE, MASSACHUSETTS
453 CHIEF JUSTICE CUSHING HIGHWAY

STEARNS MEADOW DRINKING WATER TREATMENT PLANT

REV	MM/DD/YY	DESCRIPTION

JOB NO:	0233681.02
DATE:	AUGUST 10, 2023
SCALE:	AS SHOWN
DESIGNED BY:	JC
DRAWN BY:	MB
CHECKED BY:	SK/KM
FILENAME:	023368102-G-001.dwg

DRAWING TITLE:

GENERAL NOTES, ABBREVIATIONS & LEGENDS

DRAWING NO:

G-001

\\woodardcurran.net\shared\Projects\0233681.02 scituate ma stearns meadow wtp - design\wip\Drawings\General\PERMITTING\023368102-G-001.dwg, Aug 09, 2023 - 6:16pm MBROWN

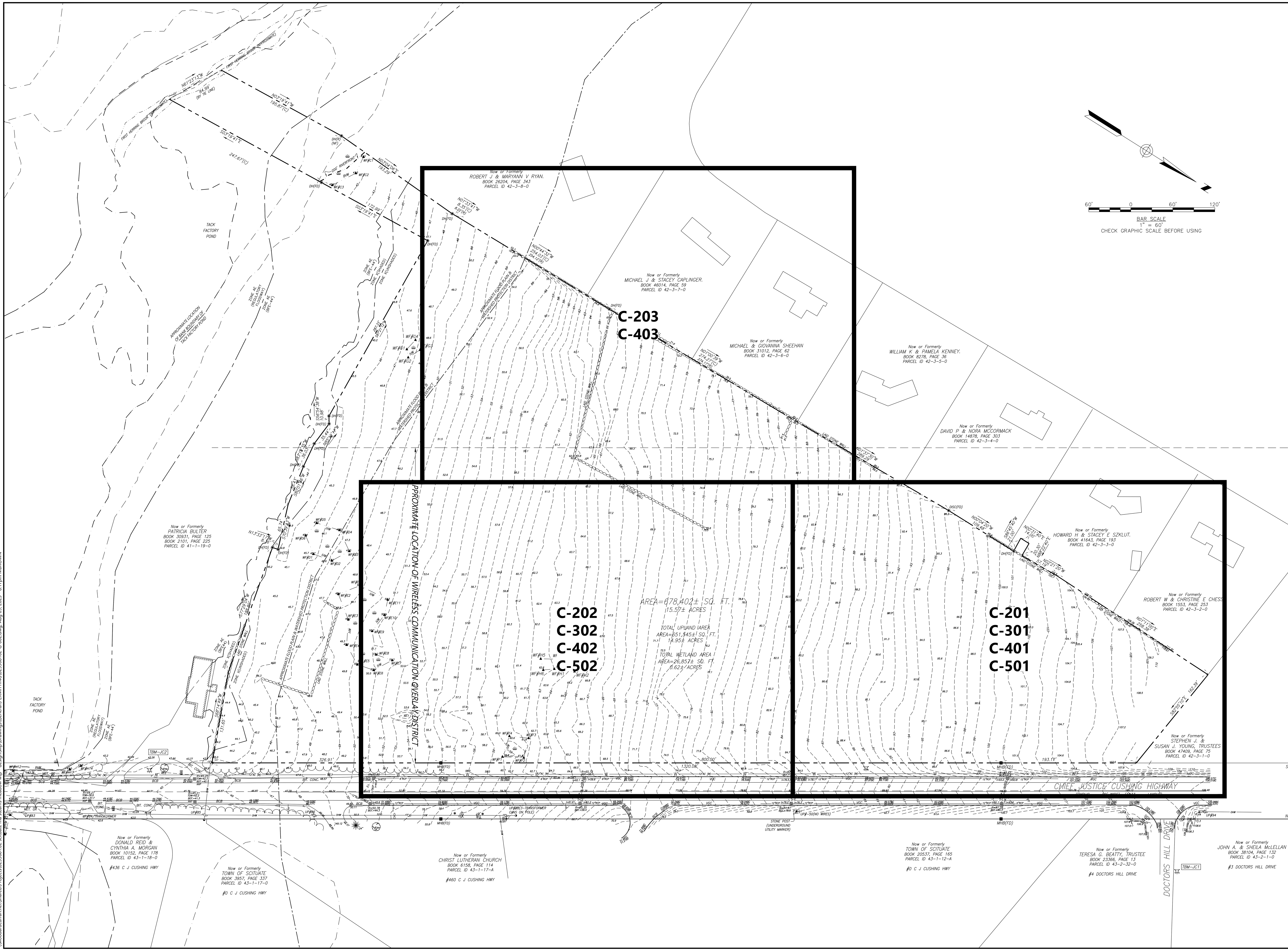

\\woodardcurran.net\shared\Projects\0233681.02 scituate ma stearns meadow wtp - design\wip\Drawings\General\PERMITTING\023368102-G-002.dwg, Aug 09, 2023 - 6:17pm MBROWN

Woodard & Curran
250 Royall Street Suite 200E
Canton, Massachusetts 02021
800.446.5518 | www.woodardcurran.com

THIS DOCUMENT IS THE PROPERTY OF WOODARD & CURRAN AND ITS CLIENT. REPRODUCTION OR MODIFICATION WITHOUT WRITTEN PERMISSION IS PROHIBITED.

PE SEAL:

COMMONWEALTH OF MASSACHUSETTS
KEVIN A. MCCAFFERY
CIVIL
No. 46778
REGISTERED PROFESSIONAL ENGINEER

ISSUE FOR PERMIT

CLIENT INFO:
TOWN OF SCITUATE, MASSACHUSETTS
453 CHIEF JUSTICE CUSHING HIGHWAY

STEARNS MEADOW DRINKING WATER TREATMENT PLANT

REV	MM/DD/YY	DESCRIPTION

JOB NO:	0233681.02
DATE:	AUGUST 10, 2023
SCALE:	AS SHOWN
DESIGNED BY:	JC
DRAWN BY:	MB
CHECKED BY:	SK/KM
FILENAME:	023368102-G-002.dwg

DRAWING TITLE:
KEY PLAN

DRAWING NO:
G-002

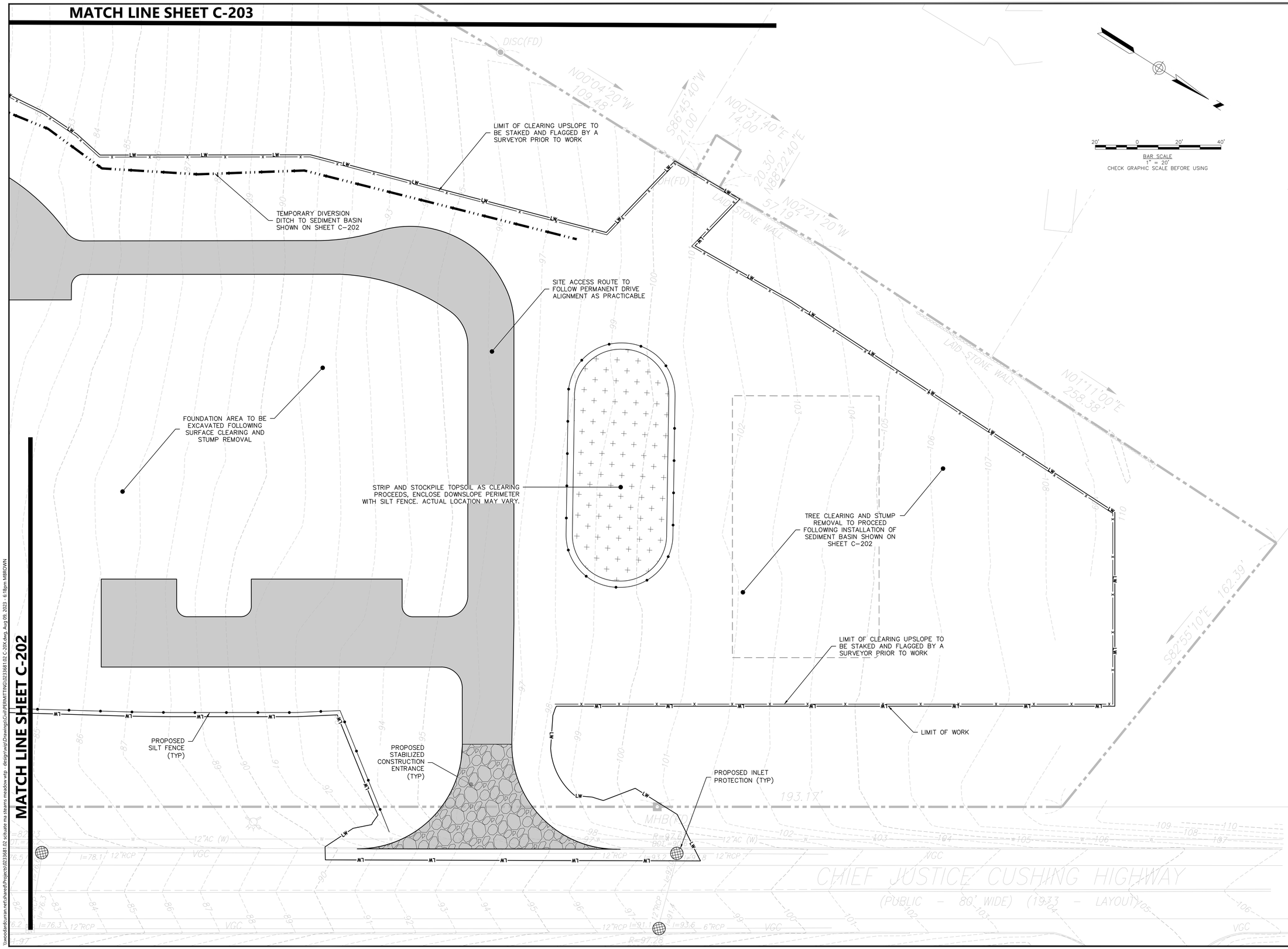

Woodard & Curran
250 Royall Street Suite 200E
Canton, Massachusetts 02021
800.446.5518 | www.woodardcurran.com

THIS DOCUMENT IS THE PROPERTY OF WOODARD & CURRAN AND ITS CLIENT. REPRODUCTION OR MODIFICATION WITHOUT WRITTEN PERMISSION IS PROHIBITED.

PE SEAL:

COMMONWEALTH OF MASSACHUSETTS
KEVIN A. MCCAFFERY
No. 46778
REGISTERED PROFESSIONAL ENGINEER

ISSUE FOR PERMIT

CLIENT INFO:
TOWN OF SCITUATE, MASSACHUSETTS
453 CHIEF JUSTICE CUSHING HIGHWAY

STEARNS MEADOW DRINKING WATER TREATMENT PLANT

REV	MM/DD/YY	DESCRIPTION

JOB NO:	0233681.02
DATE:	AUGUST 10, 2023
SCALE:	AS SHOWN
DESIGNED BY:	JC
DRAWN BY:	MB
CHECKED BY:	SK/KM
FILENAME:	0233681.02 C-20X.dwg

DRAWING TITLE:

EROSION & SEDIMENT CONTROL PLAN

DRAWING NO:

C-201

\\woodardcurran.net\shared\Projects\0233681.02 scituate ma stearns meadow wtp - design\wip\Drawings\Civil\PERMITTING\0233681.02 C-20X.dwg, Aug 09, 2023 - 6:18pm MBROWN

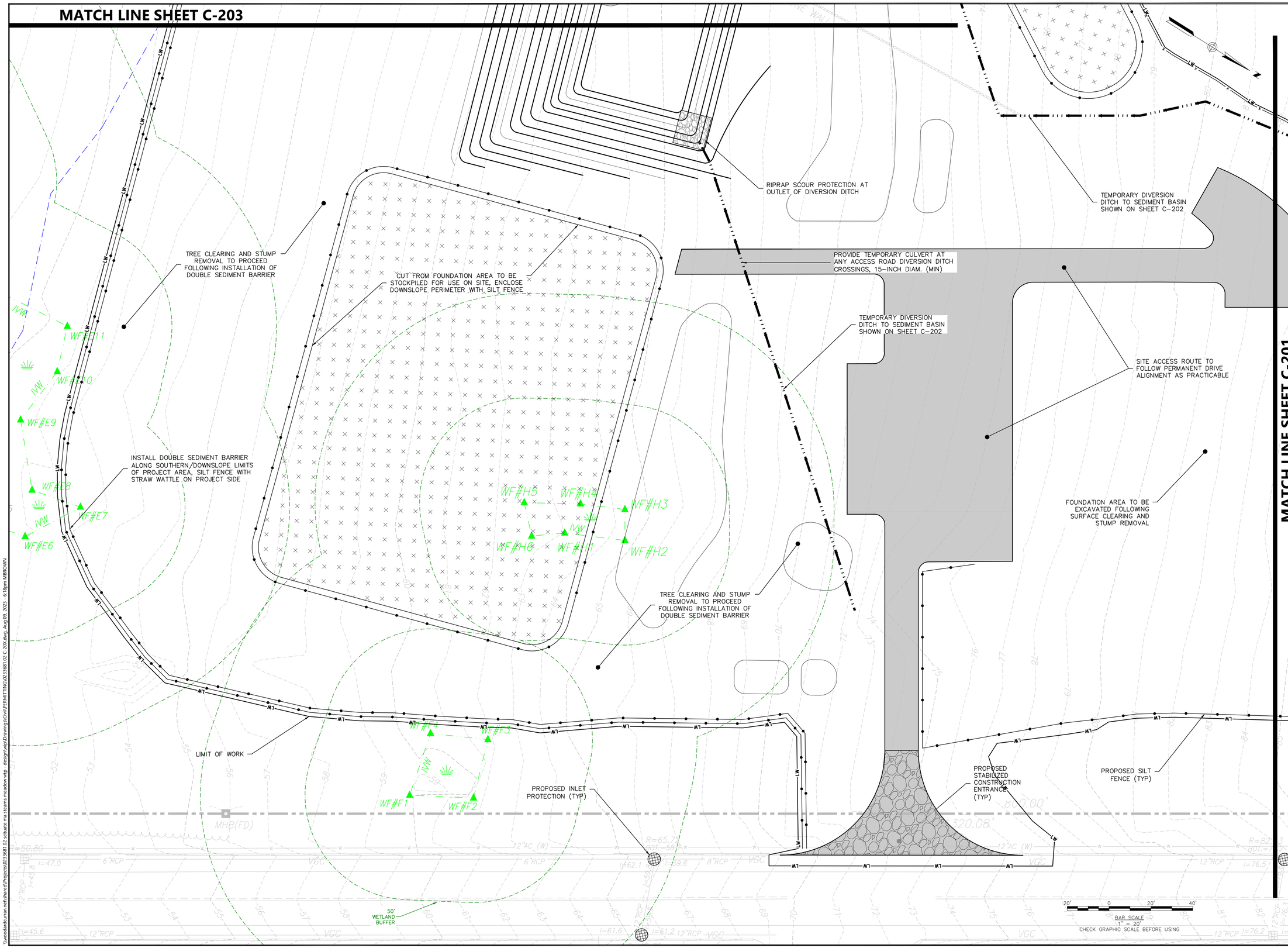

Woodard & Curran
250 Royall Street Suite 200E
Canton, Massachusetts 02021
800.446.5518 | www.woodardcurran.com

THIS DOCUMENT IS THE PROPERTY OF WOODARD & CURRAN AND ITS CLIENT. REPRODUCTION OR MODIFICATION WITHOUT WRITTEN PERMISSION IS PROHIBITED.

PE SEAL:

COMMONWEALTH OF MASSACHUSETTS
KEVIN A. MCCAFFERY
No. 48778
REGISTERED PROFESSIONAL ENGINEER

ISSUE FOR PERMIT

CLIENT INFO:
TOWN OF SCITUATE, MASSACHUSETTS
453 CHIEF JUSTICE CUSHING HIGHWAY

STEARNS MEADOW DRINKING WATER TREATMENT PLANT

REV	MM/DD/YY	DESCRIPTION

JOB NO:	0233681.02
DATE:	AUGUST 10, 2023
SCALE:	AS SHOWN
DESIGNED BY:	JC
DRAWN BY:	MB
CHECKED BY:	SK/KM
FILENAME:	0233681.02 C-20X.dwg

DRAWING TITLE:

EROSION & SEDIMENT CONTROL PLAN

DRAWING NO:

C-202

\\woodardcuran.net\shared\Projects\0233681.02 scituate ma stearns meadow wtp - design\wip\Drawings\Civil\PERMITTING\0233681.02 C-20X.dwg, Aug 09, 2023 - 6:18pm MBROWN

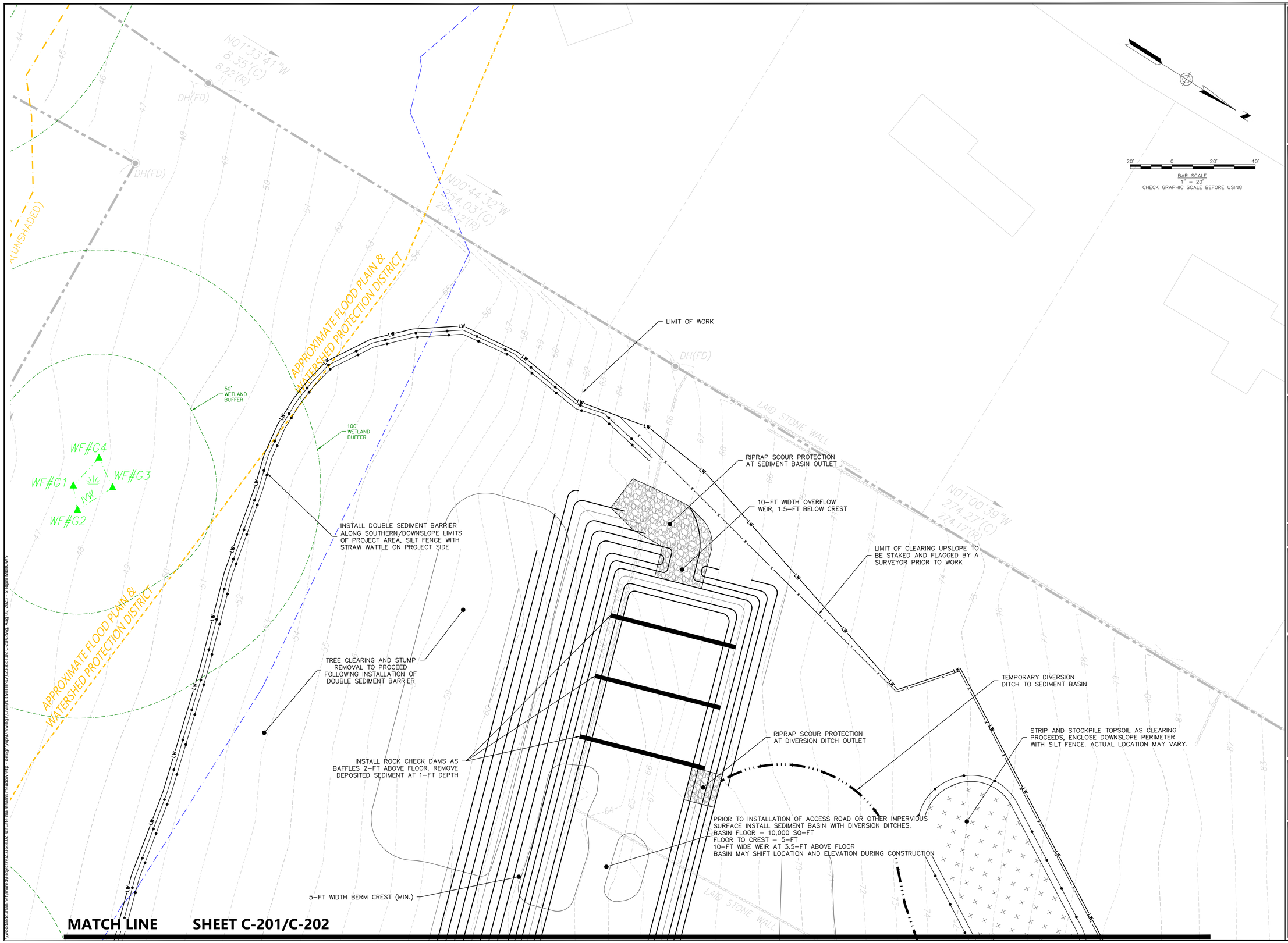

Woodard & Curran
250 Royall Street Suite 200E
Canton, Massachusetts 02021
800.446.5518 | www.woodardcurran.com

THIS DOCUMENT IS THE PROPERTY OF WOODARD & CURRAN AND ITS CLIENT. REPRODUCTION OR MODIFICATION WITHOUT WRITTEN PERMISSION IS PROHIBITED.

PE SEAL:

COMMONWEALTH OF MASSACHUSETTS
KEVIN A. MCCAFFERY
No. 48778
REGISTERED PROFESSIONAL ENGINEER

ISSUE FOR PERMIT

CLIENT INFO:
TOWN OF SCITUATE, MASSACHUSETTS
453 CHIEF JUSTICE CUSHING HIGHWAY

STEARNS MEADOW DRINKING WATER TREATMENT PLANT

REV	MM/DD/YY	DESCRIPTION

JOB NO:	0233681.02
DATE:	AUGUST 10, 2023
SCALE:	AS SHOWN
DESIGNED BY:	JC
DRAWN BY:	MB
CHECKED BY:	SK/KM
FILENAME:	0233681.02 C-20X.dwg

DRAWING TITLE:

EROSION & SEDIMENT CONTROL PLAN

DRAWING NO:

C-203

ZONING TABLE			
ZONING DISTRICT		R1	
ZONING OVERLAY DISTRICTS		FLOODPLAIN & WATERSHED PROTECTION, WATER RESOURCE PROTECTION, WIRELESS COMMUNICATION	
INTENDED USE OF SITE		WATER TREATMENT PLANT, WATER DEPARTMENT DIVISION AND ADMINISTRATION	
NUMBER OF PEOPLE USING THE SITE		MAX 15 EMPLOYEES / 10–14 AVERAGE EMPLOYEES PER DAY AND 2 VISITORS (AVG) PER DAY	
NUMBER OF EXISTING PARKING SPACE		0	
FLOOR AREA (SQUARE–FEET)		EXISTING	PROPOSED
		0	35,000 +/–
		REQUIRED	PROPOSED
SETBACKS	FRONT	50' ACOUSTIC BUFFER, 100' NO BUILDING	50' ACOUSTIC BUFFER, 120' NO BUILDING
	SIDE	15' NO BUILDING	314'
	REAR	30' NO BUILDING	128'
PARKING SPACES		USE: OTHER (AS REQUIRED BY PLANNING BOARD)	18
ADA PARKING SPACES		1	1

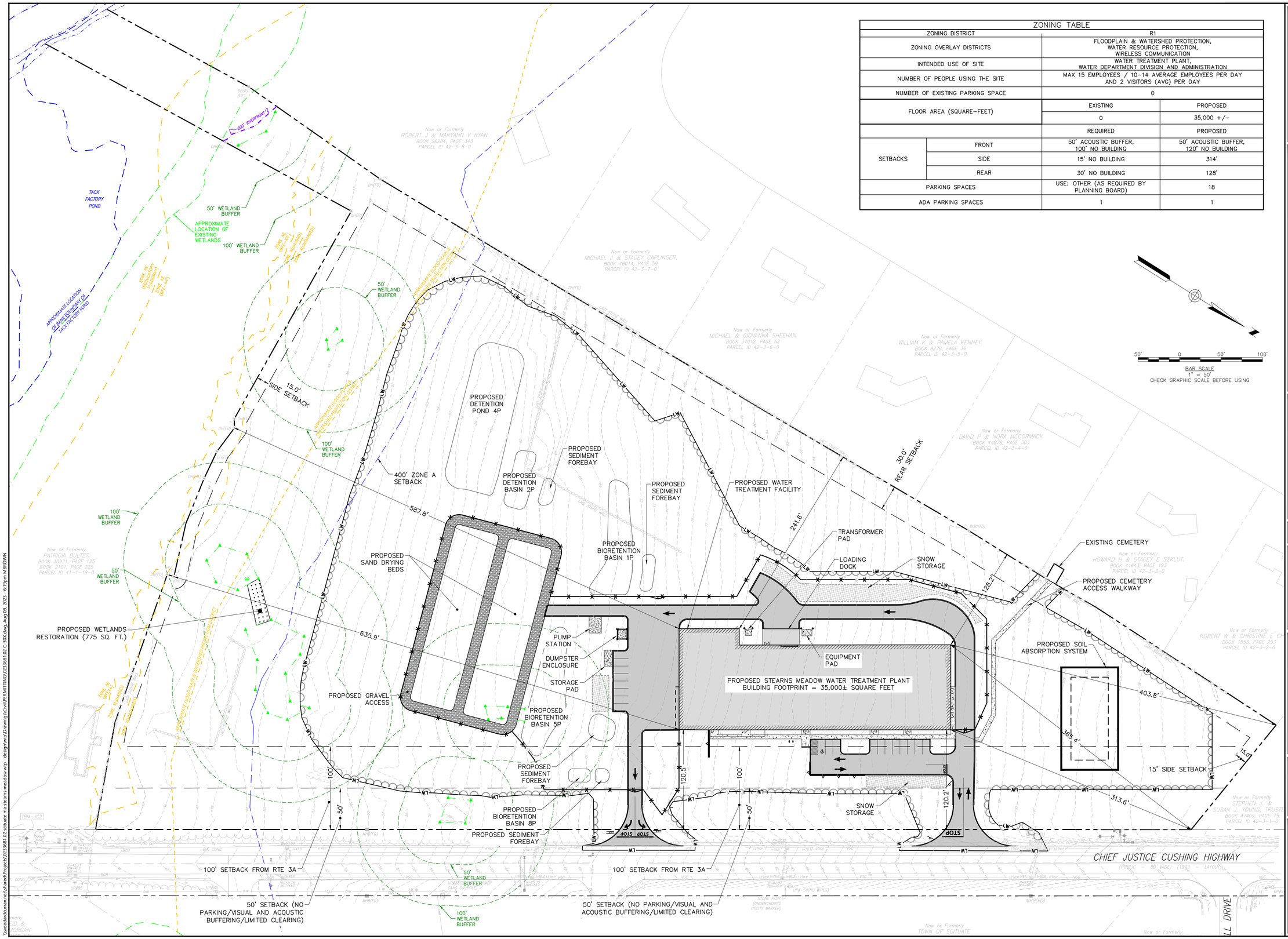

Woodard & Curran
250 Royall Street Suite 200E
Canton, Massachusetts 02021
800.446.5518 | www.woodardcurran.com

THIS DOCUMENT IS THE PROPERTY OF WOODARD & CURRAN AND ITS CLIENT. REPRODUCTION OR MODIFICATION WITHOUT WRITTEN PERMISSION IS PROHIBITED.

PE SEAL:

COMMONWEALTH OF MASSACHUSETTS
KEVIN A. MCCAFFERY
No. 46778
REGISTERED PROFESSIONAL ENGINEER

ISSUE FOR PERMIT

CLIENT INFO:
TOWN OF SCITUATE, MASSACHUSETTS
453 CHIEF JUSTICE CUSHING HIGHWAY

STEARNS MEADOW DRINKING WATER TREATMENT PLANT

REV	MM/DD/YY	DESCRIPTION

JOB NO:	0233681.02
DATE:	AUGUST 10, 2023
SCALE:	AS SHOWN
DESIGNED BY:	JC
DRAWN BY:	MB
CHECKED BY:	SK
FILENAME:	02336681.02 C-30X.dwg

DRAWING TITLE:

OVERALL SITE LAYOUT PLAN

DRAWING NO:

C-300

\\woodardcuran.net\shared\Projects\0233681.02 scituate ma stearns meadow wtp - design\wip\Drawings\Civil\PERMITTING\0233681.02 C-30X.dwg, Aug 09, 2023 - 6:19pm MBROWN

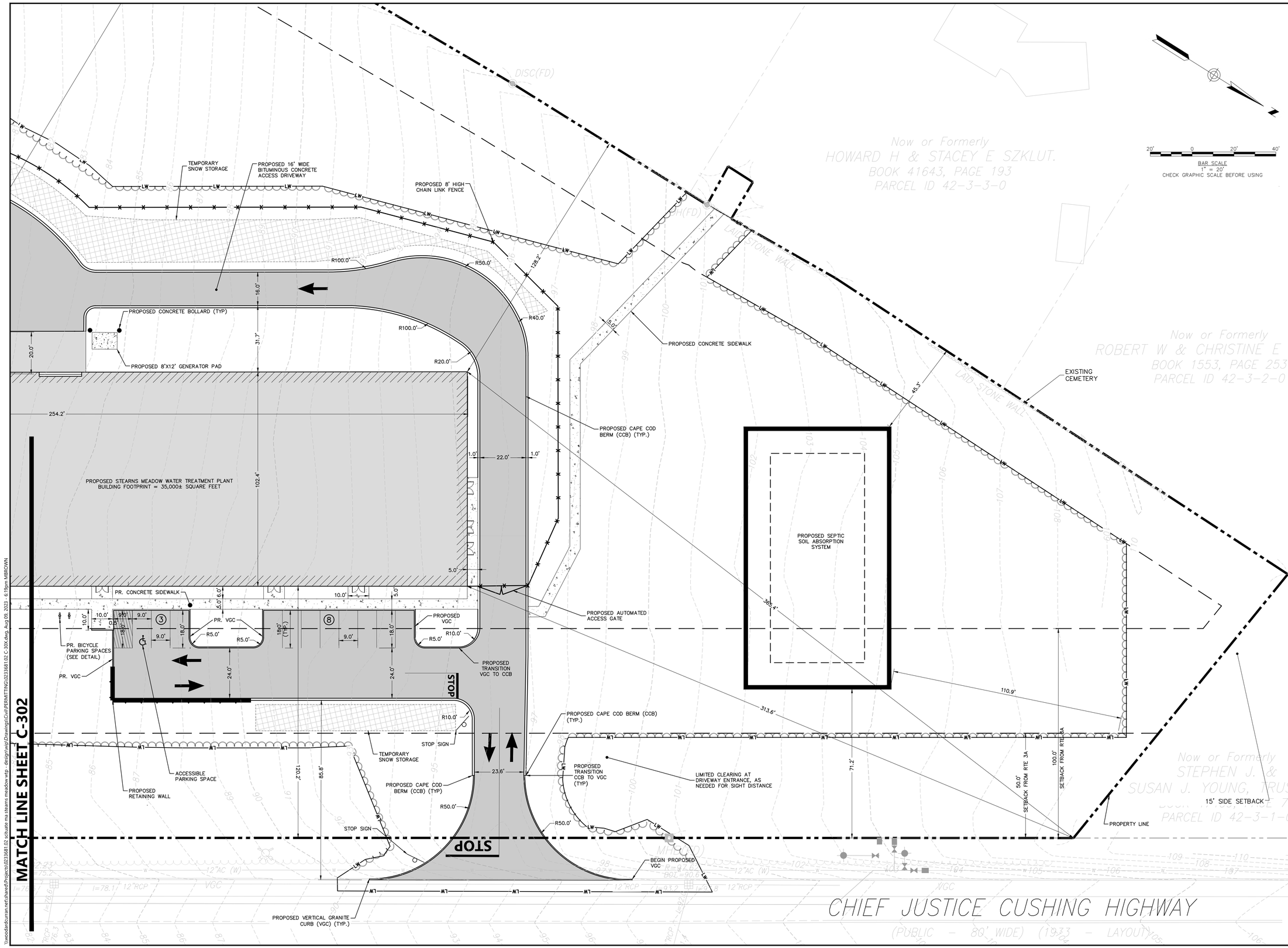

Woodard & Curran
250 Royall Street Suite 200E
Canton, Massachusetts 02021
800.446.5518 | www.woodardcurran.com

THIS DOCUMENT IS THE PROPERTY OF WOODARD & CURRAN AND ITS CLIENT. REPRODUCTION OR MODIFICATION WITHOUT WRITTEN PERMISSION IS PROHIBITED.

PE SEAL:

COMMONWEALTH OF MASSACHUSETTS
KEVIN A. MCCAFFERY
No. 46778
REGISTERED PROFESSIONAL ENGINEER

DRAFT-NOT FOR CONSTRUCTION

CLIENT INFO:
TOWN OF SCITUATE, MASSACHUSETTS
453 CHIEF JUSTICE CUSHING HIGHWAY

STEARNS MEADOW DRINKING WATER TREATMENT PLANT

REV	MM/DD/YY	DESCRIPTION

JOB NO:	0233681.02
DATE:	AUGUST 10, 2023
SCALE:	AS SHOWN
DESIGNED BY:	JC
DRAWN BY:	MB
CHECKED BY:	SK
FILENAME:	0233681.02 C-30X.dwg

DRAWING TITLE:

SITE LAYOUT PLAN

DRAWING NO:

C-301

\\woodardcuran.net\shared\Projects\0233681.02 - scituate ma stearns meadow wtp - design\wip\Drawings\Civil\PERMITTING\0233681.02 C-30X.dwg Aug 09, 2023 - 6:19pm MBROWN

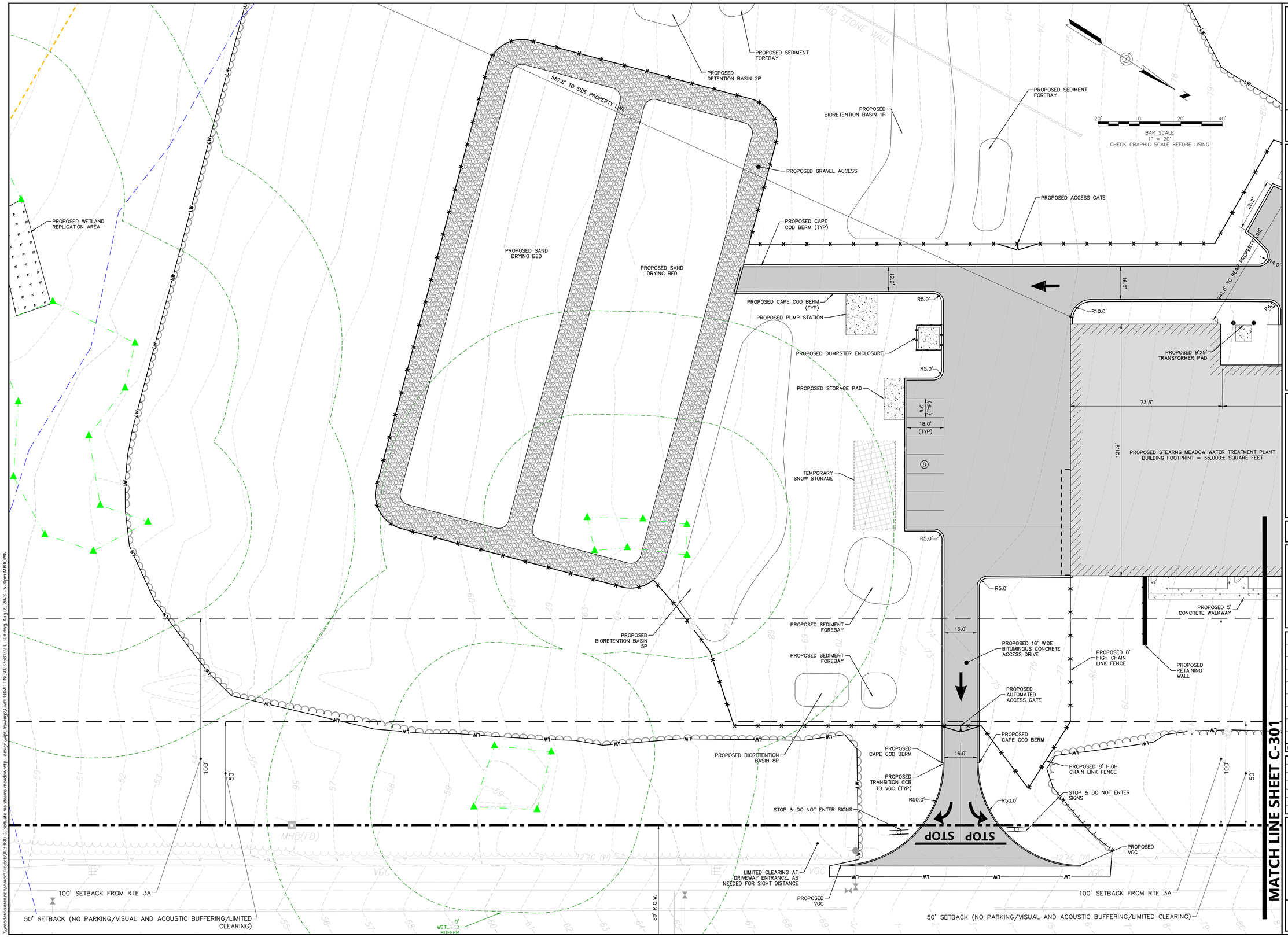

Woodard & Curran
250 Royall Street Suite 200E
Canton, Massachusetts 02021
800.446.5518 | www.woodardcurran.com

THIS DOCUMENT IS THE PROPERTY OF WOODARD & CURRAN AND ITS CLIENT. REPRODUCTION OR MODIFICATION WITHOUT WRITTEN PERMISSION IS PROHIBITED.

PE SEAL:

COMMONWEALTH OF MASSACHUSETTS
KEVIN A. MCCAFFERY
No. 46778
REGISTERED PROFESSIONAL ENGINEER
08/10/23

ISSUE FOR PERMIT

CLIENT INFO:
TOWN OF SCITUATE, MASSACHUSETTS
453 CHIEF JUSTICE CUSHING HIGHWAY

STEARNS MEADOW DRINKING WATER TREATMENT PLANT

REV	MM/DD/YY	DESCRIPTION

JOB NO:	0233681.02
DATE:	AUGUST 10, 2023
SCALE:	AS SHOWN
DESIGNED BY:	JC
DRAWN BY:	MB
CHECKED BY:	SK
FILENAME:	0233681.02 C-30X.dwg

DRAWING TITLE:

SITE LAYOUT PLAN

DRAWING NO:

C-302

\\woodardcurran.net\shared\Projects\0233681.02 aquate ma stearns meadow wtp - design\wip\Drawings\Civil\PERMITTING\0233681.02 C-30X.dwg Aug 09, 2023 - 6:20pm MBROWN

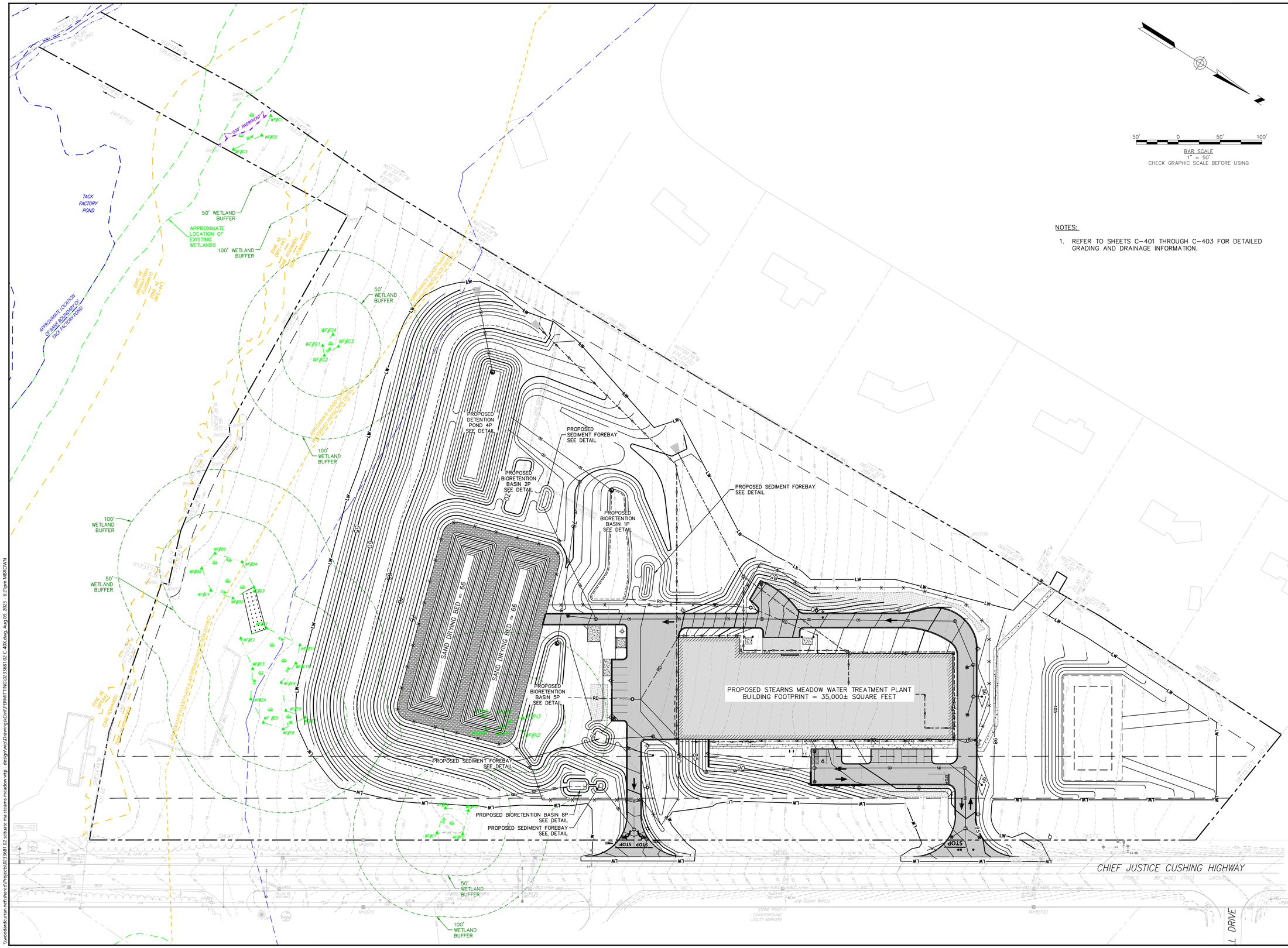

BAR SCALE
1" = 50'
CHECK GRAPHIC SCALE BEFORE USING

NOTES:

1. REFER TO SHEETS C-401 THROUGH C-403 FOR DETAILED GRADING AND DRAINAGE INFORMATION.

Woodard & Curran
250 Royall Street Suite 200E
Canton, Massachusetts 02021
800.446.5518 | www.woodardcurran.com

THIS DOCUMENT IS THE PROPERTY OF WOODARD & CURRAN AND ITS CLIENT. REPRODUCTION OR MODIFICATION WITHOUT WRITTEN PERMISSION IS PROHIBITED.

PE SEAL:

COMMONWEALTH OF MASSACHUSETTS
KEVIN A. MCCAFFERY
No. 46778
REGISTERED PROFESSIONAL ENGINEER

ISSUE FOR PERMIT

CLIENT INFO:
TOWN OF SCITUATE, MASSACHUSETTS
453 CHIEF JUSTICE CUSHING HIGHWAY

STEARNS MEADOW DRINKING WATER TREATMENT PLANT

REV	MM/DD/YY	DESCRIPTION

JOB NO:	0233681.02
DATE:	AUGUST 10, 2023
SCALE:	AS SHOWN
DESIGNED BY:	JC
DRAWN BY:	MB
CHECKED BY:	SK
FILENAME:	0233681.02 C-40X.dwg

DRAWING TITLE:

OVERALL GRADING & DRAINAGE PLAN

DRAWING NO:

C-400

\\woodardcurran.net\shared\Projects\0233681.02 scituate ma stearns meadow wtp - design\wp\Drawings\Civil\PERMITTING\0233681.02 C-40X.dwg, Aug 09, 2023 - 6:21pm MBROWN

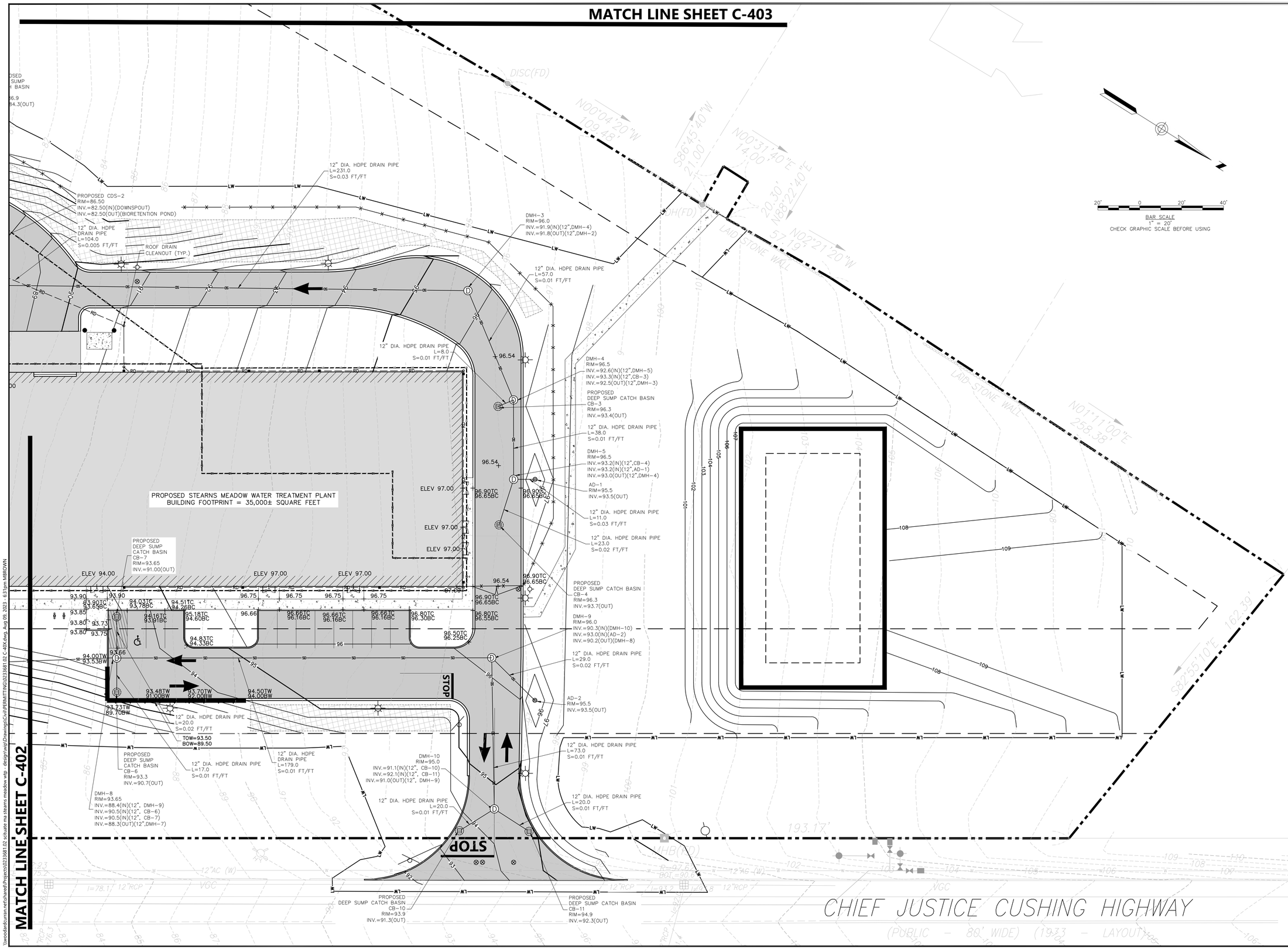

Woodard & Curran
250 Royall Street Suite 200E
Canton, Massachusetts 02021
800.446.5518 | www.woodardcurran.com

THIS DOCUMENT IS THE PROPERTY OF WOODARD & CURRAN AND ITS CLIENT. REPRODUCTION OR MODIFICATION WITHOUT WRITTEN PERMISSION IS PROHIBITED.

PE SEAL:

COMMONWEALTH OF MASSACHUSETTS
KEVIN A. MCCAFFERY
No. 48778
REGISTERED PROFESSIONAL ENGINEER

ISSUE FOR PERMIT

CLIENT INFO:
TOWN OF SCITUATE,
MASSACHUSETTS
453 CHIEF JUSTICE
CUSHING HIGHWAY

STEARNS MEADOW
DRINKING WATER
TREATMENT PLANT

REV	MM/DD/YY	DESCRIPTION

JOB NO:	0233681.02
DATE:	AUGUST 10, 2023
SCALE:	AS SHOWN
DESIGNED BY:	JC
DRAWN BY:	MB
CHECKED BY:	SK/KM
FILENAME:	0233681.02 C-40X.dwg

DRAWING TITLE:

GRADING & DRAINAGE PLAN

DRAWING NO:

C-401

\\woodardcurran.net\shared\Projects\0233681.02 scituate ma stearns meadow wtp - design\wip\Drawings\Civil\PERMITTING\0233681.02 C-40X.dwg, Aug 09, 2023 - 6:31pm MBROWN

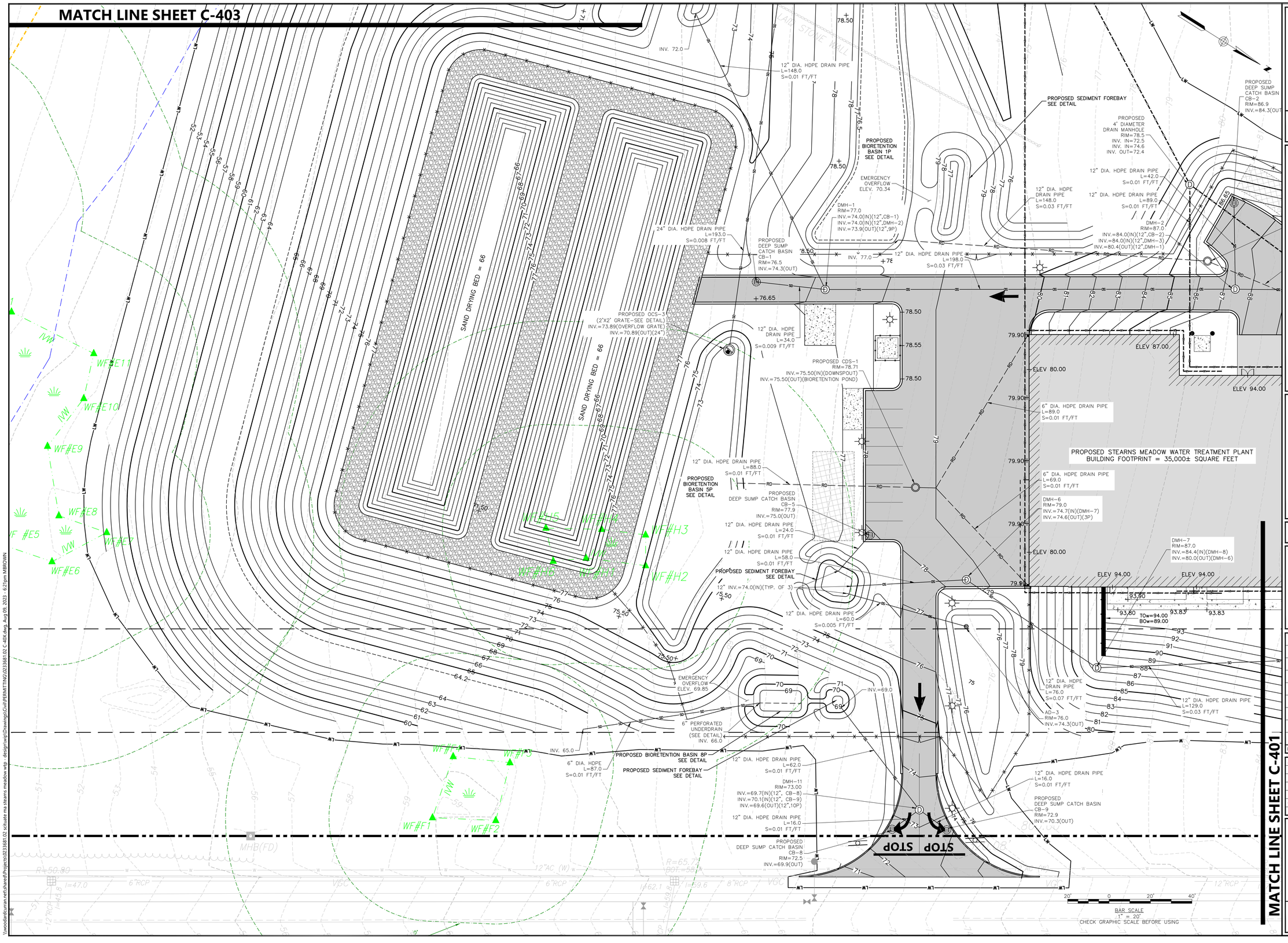

MATCH LINE SHEET C-401

Woodard & Curran
250 Royall Street Suite 200E
Canton, Massachusetts 02021
800.446.5518 | www.woodardcurran.com

THIS DOCUMENT IS THE PROPERTY OF WOODARD & CURRAN AND ITS CLIENT. REPRODUCTION OR MODIFICATION WITHOUT WRITTEN PERMISSION IS PROHIBITED.

PE SEAL:

COMMONWEALTH OF MASSACHUSETTS
KEVIN A. MCCAFFERY
No. 46778
REGISTERED PROFESSIONAL ENGINEER

ISSUE FOR PERMIT

CLIENT INFO:
TOWN OF SCITUATE,
MASSACHUSETTS
453 CHIEF JUSTICE
CUSHING HIGHWAY

STEARNS MEADOW
DRINKING WATER
TREATMENT PLANT

REV	MM/DD/YY	DESCRIPTION

JOB NO:	0233681.02
DATE:	AUGUST 10, 2023
SCALE:	AS SHOWN
DESIGNED BY:	JC
DRAWN BY:	MB
CHECKED BY:	SK/KM
FILENAME:	0233681.02 C-40X.dwg

DRAWING TITLE:

GRADING & DRAINAGE PLAN

DRAWING NO:

C-402

\\woodardcuran.net\shared\Projects\0233681.02 actuate ma stearns meadow wtp - design\wp\Drawings\Civil\PERMITTING\0233681.02 C-40X.dwg Aug 09, 2023 - 6:21pm MBROWN

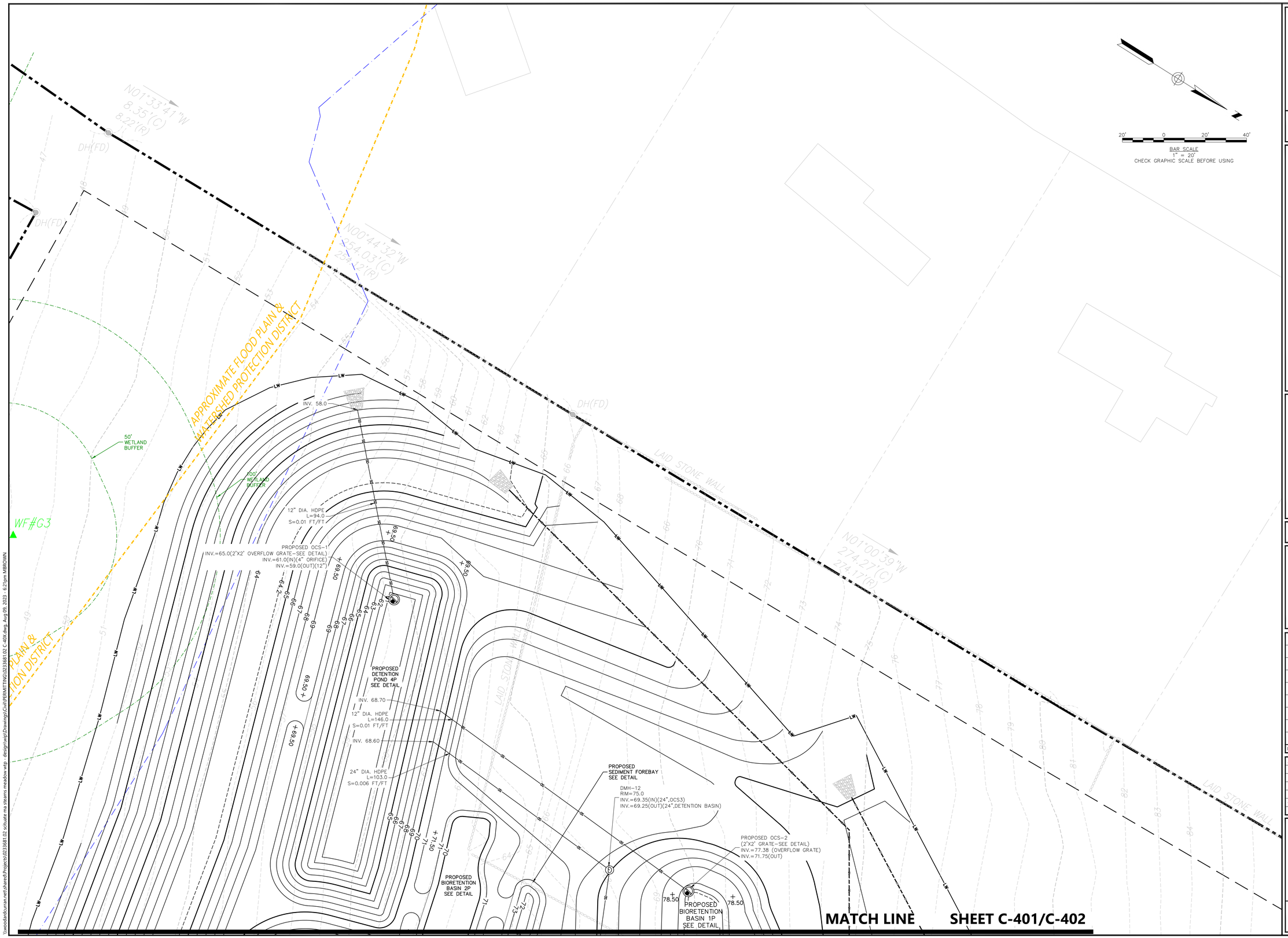

Woodard & Curran
250 Royall Street Suite 200E
Canton, Massachusetts 02021
800.446.5518 | www.woodardcurran.com

THIS DOCUMENT IS THE PROPERTY OF WOODARD & CURRAN AND ITS CLIENT. REPRODUCTION OR MODIFICATION WITHOUT WRITTEN PERMISSION IS PROHIBITED.

PE SEAL:

COMMONWEALTH OF MASSACHUSETTS
KEVIN A. MCCAFFERY
No. 46778
REGISTERED PROFESSIONAL ENGINEER

ISSUE FOR PERMIT

CLIENT INFO:
TOWN OF SCITUATE, MASSACHUSETTS
453 CHIEF JUSTICE CUSHING HIGHWAY

STEARNS MEADOW DRINKING WATER TREATMENT PLANT

REV	MM/DD/YY	DESCRIPTION

JOB NO:	0233681.02
DATE:	AUGUST 10, 2023
SCALE:	AS SHOWN
DESIGNED BY:	JC
DRAWN BY:	MB
CHECKED BY:	SK/KM
FILENAME:	0233681.02 C-40X.dwg

DRAWING TITLE:

GRADING & DRAINAGE PLAN

DRAWING NO:

C-403

\\woodardcuran.net\shared\Projects\0233681.02 actuate ma stearns meadow wtp - design\wip\Drawings\Civil\PERMITTING\0233681.02 C-40X.dwg Aug 09, 2023 - 6:21pm MBROWN

24x36

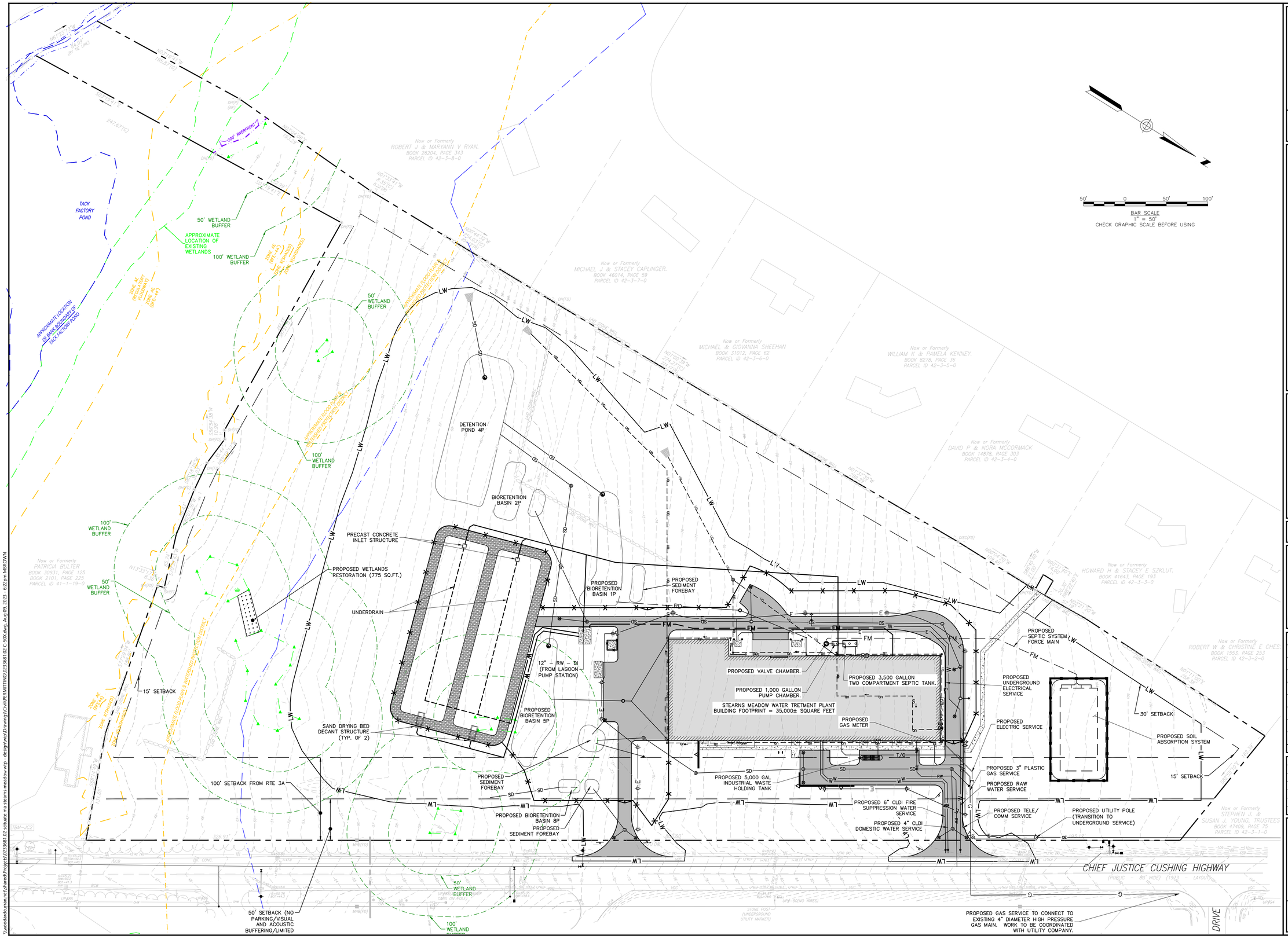

Woodard & Curran
250 Royall Street Suite 200E
Canton, Massachusetts 02021
800.446.5518 | www.woodardcurran.com

THIS DOCUMENT IS THE PROPERTY OF WOODARD & CURRAN AND ITS CLIENT. REPRODUCTION OR MODIFICATION WITHOUT WRITTEN PERMISSION IS PROHIBITED.

PE SEAL:

COMMONWEALTH OF MASSACHUSETTS
KEVIN A. MCCAFFERY
No. 48778
REGISTERED PROFESSIONAL ENGINEER

ISSUE FOR PERMIT

CLIENT INFO:
TOWN OF SCITUATE, MASSACHUSETTS
453 CHIEF JUSTICE CUSHING HIGHWAY

STEARNS MEADOW DRINKING WATER TREATMENT PLANT

REV	MM/DD/YY	DESCRIPTION

JOB NO:	0233681.02
DATE:	AUGUST 10, 2023
SCALE:	AS SHOWN
DESIGNED BY:	JC
DRAWN BY:	MB
CHECKED BY:	SK
FILENAME:	0233681.02 C-50X.dwg

DRAWING TITLE:

OVERALL UTILITIES PLAN

DRAWING NO:

C-500

\\woodardcuran.net\shared\Projects\0233681.02 actuate ma stearns meadow wtp - design\wp\Drawings\Civil\PERMITTING\0233681.02 C-50X.dwg Aug 09, 2023 - 6:22pm MBROWN

24x36

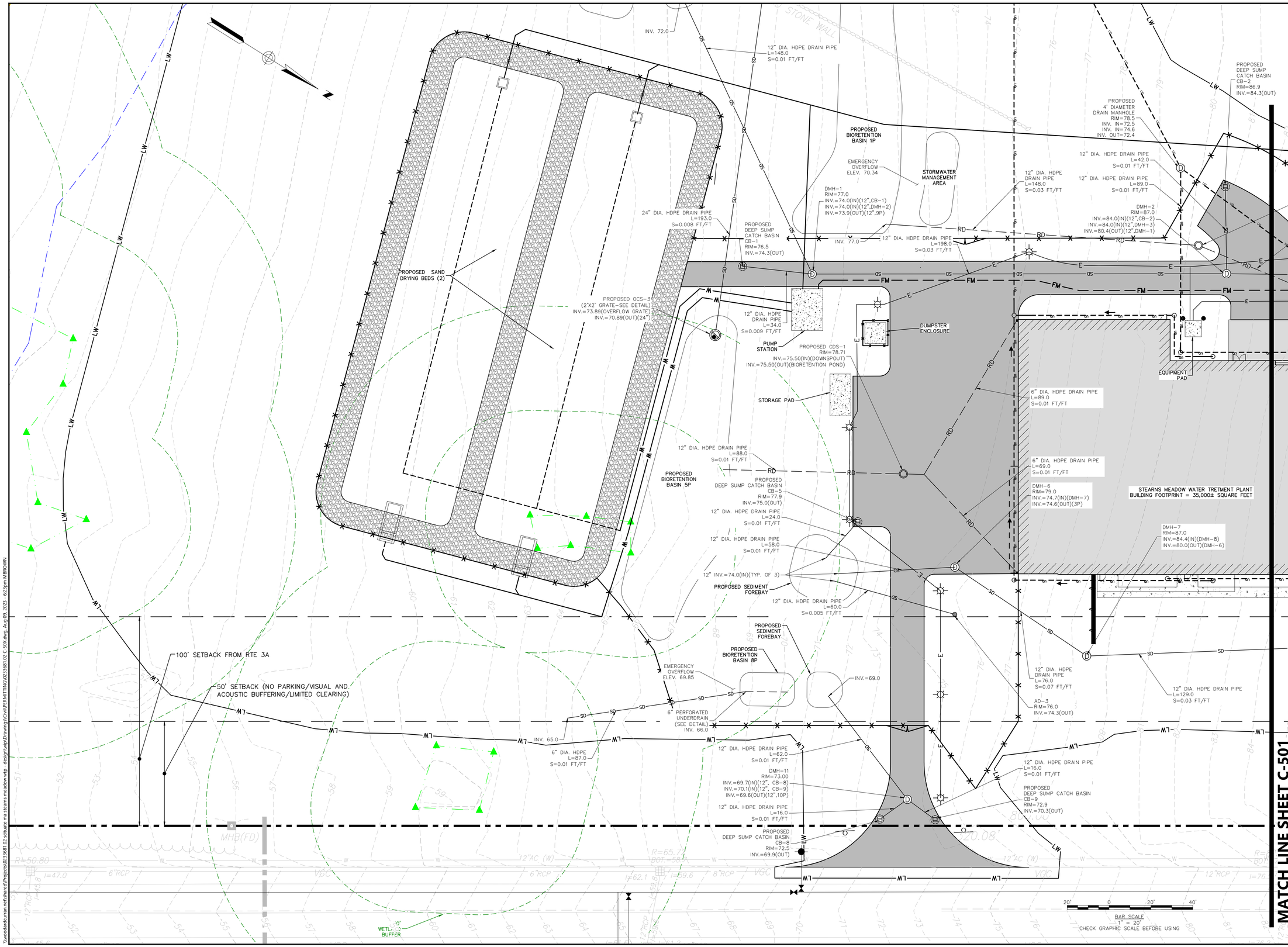

Woodard & Curran
250 Royall Street Suite 200E
Canton, Massachusetts 02021
800.446.5518 | www.woodardcurran.com

THIS DOCUMENT IS THE PROPERTY OF WOODARD & CURRAN AND ITS CLIENT. REPRODUCTION OR MODIFICATION WITHOUT WRITTEN PERMISSION IS PROHIBITED.

PE SEAL:

COMMONWEALTH OF MASSACHUSETTS
KEVIN A. MCCAFFERY
No. 46778
REGISTERED PROFESSIONAL ENGINEER

ISSUE FOR PERMIT

CLIENT INFO:
TOWN OF SCITUATE, MASSACHUSETTS
453 CHIEF JUSTICE CUSHING HIGHWAY

STEARNS MEADOW DRINKING WATER TREATMENT PLANT

REV	MM/DD/YY	DESCRIPTION

JOB NO:	0233681.02
DATE:	AUGUST 10, 2023
SCALE:	AS SHOWN
DESIGNED BY:	JC
DRAWN BY:	MB
CHECKED BY:	SK
FILENAME:	0233681.02 C-50X.dwg

DRAWING TITLE:

UTILITIES PLAN

DRAWING NO:

C-502

\\wcsofduranc.net\shared\Projects\0233681.02-scituate ma stearns meadow wtp - design\wtp\Drawings\Civil\PERMITTING\0233681.02 C-50X.dwg Aug 09, 2023 - 6:23pm MBROWN

24x36

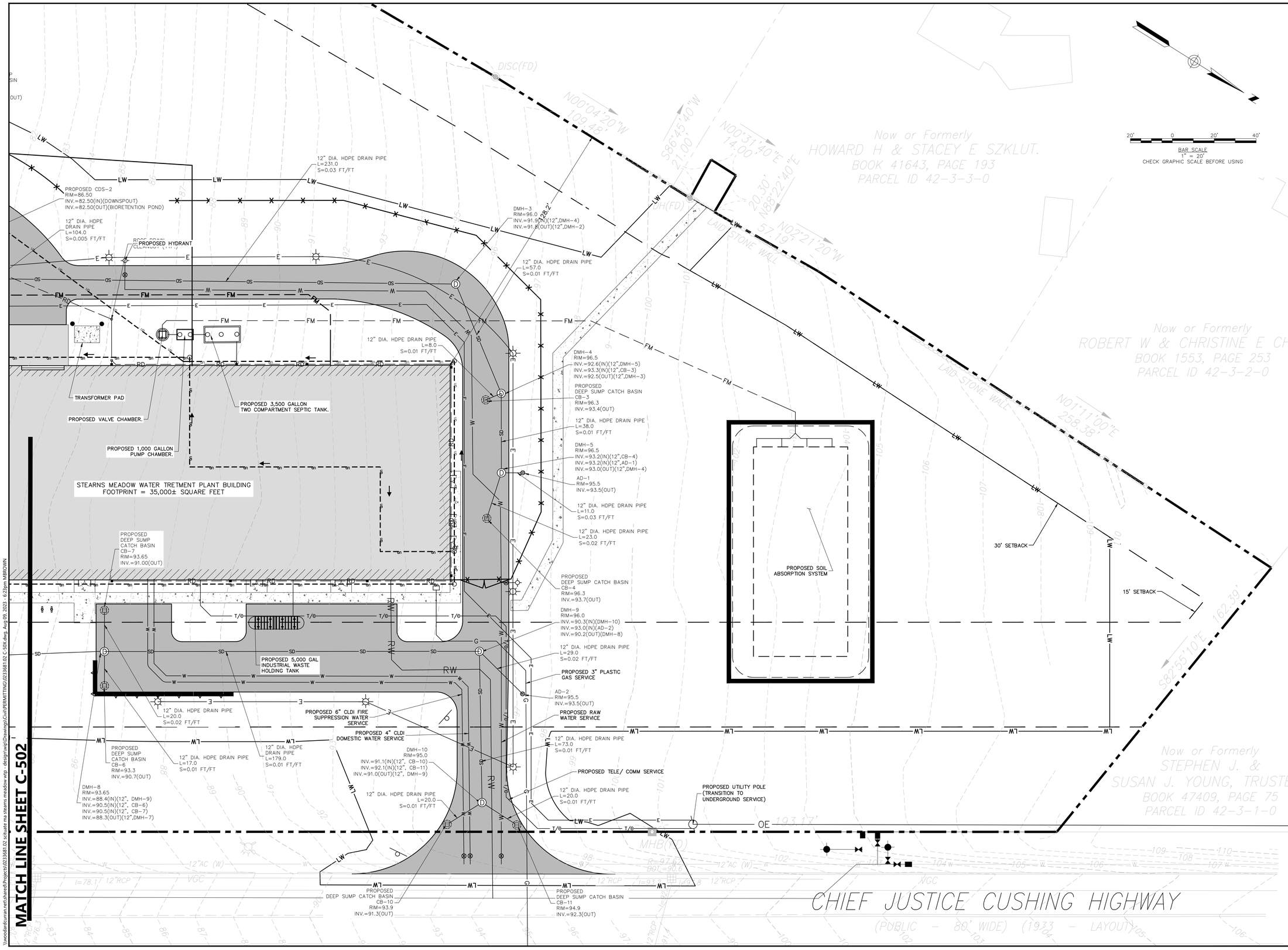

Woodard & Curran
250 Royall Street Suite 200E
Canton, Massachusetts 02021
800.446.5518 | www.woodardcurran.com

THIS DOCUMENT IS THE PROPERTY OF WOODARD & CURRAN AND ITS CLIENT. REPRODUCTION OR MODIFICATION WITHOUT WRITTEN PERMISSION IS PROHIBITED.

PE SEAL:

COMMONWEALTH OF MASSACHUSETTS
KEVIN A. MCCAFFERY
No. 46778
REGISTERED PROFESSIONAL ENGINEER

ISSUE FOR PERMIT

CLIENT INFO:
TOWN OF SCITUATE,
MASSACHUSETTS
453 CHIEF JUSTICE
CUSHING HIGHWAY

STEARNS MEADOW
DRINKING WATER
TREATMENT PLANT

REV	MM/DD/YY	DESCRIPTION

JOB NO:	0233681.02
DATE:	AUGUST 10, 2023
SCALE:	AS SHOWN
DESIGNED BY:	JC
DRAWN BY:	MB
CHECKED BY:	SK
FILENAME:	0233681.02 C-50X.dwg

DRAWING TITLE:

UTILITIES PLAN

DRAWING NO:

C-501

\\woodardcurran.net\shared\Projects\0233681.02 scituate ma stearns meadow wtp - design\wp\Drawings\Civil\PERMITTING\0233681.02 C-50X.dwg, Aug 09, 2023 - 6:23pm MBROWN

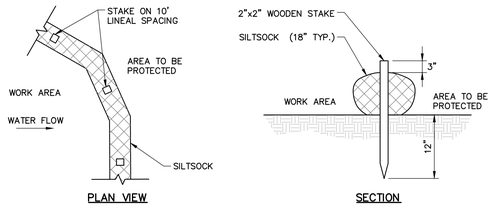

PLAN VIEW SECTION

NOTE:

1. WHEN STAKING IS NOT POSSIBLE, HEAVY CONCRETE BLOCKS SHALL BE USED BEHIND THE SEDIMENT CONTROL TO HELP STABILIZE DURING RAINFALL/RUNOFF EVENTS.

SEDIMENT BARRIER – SILT SOCK

NOT TO SCALE

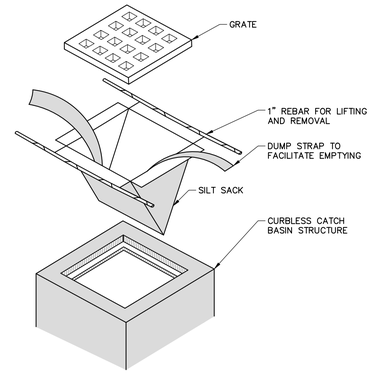

NOTES:

1. INSTALL SILTSACK PER MANUFACTURER'S INSTRUCTIONS AND RECOMMENDATIONS.
2. EMPTY OR REMOVE SEDIMENT FROM SILTSACK WHEN RESTRAINT CORD IS NO LONGER VISIBLE. CLEAN, RINSE, AND REPLACE AS NEEDED.
3. SILT SACKS TO BE INSTALLED WHEN THE POTENTIAL FOR SEDIMENT TO ENTER EXISTING & PROPOSED BASINS EXISTS.

SILTSACK – CURBLESS INLET

NOT TO SCALE

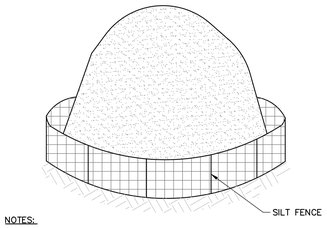

NOTES:

1. STOCKPILES SHALL BE SURROUNDED BY SILT FENCE.
2. STOCKPILES SHALL HAVE A MAXIMUM 2:1 (H:V) SIDE SLOPE.
3. REPAIR OR REPLACE DAMAGED SILT FENCE DUE TO CONSTRUCTION ACTIVITIES OR STOCKPILE MITIGATION.
4. STOCKPILE SHALL BE LOCATED IN AREAS AS SHOWN ON THE DRAWINGS OR APPROVED BY THE ENGINEER.

TEMPORARY SOIL STOCKPILE

NOT TO SCALE

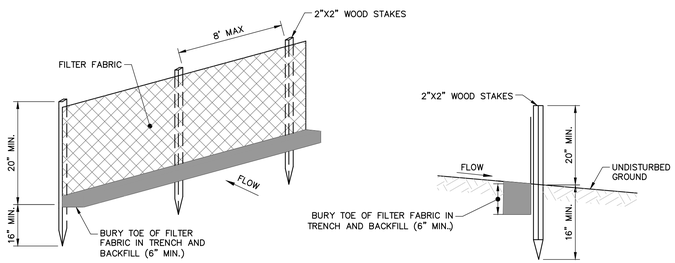

ISOMETRIC VIEW SECTION VIEW

NOTES:

1. INSTALL FABRIC ON UPHILL SIDE OF WOOD STAKES.
2. SPACING BETWEEN WOOD STAKES PER MANUFACTURER'S RECOMMENDATION.
3. SILT FENCE WILL NOT BE USED IN DRAINAGE WAYS.
4. MAINTENANCE: INSPECT FOR TEARS IN THE FABRIC OR DAMAGE TO SUPPORTS. REPAIR AS NECESSARY. REMOVE ACCUMULATED SEDIMENT WHEN IT REACHES A DEPTH OF SIX-INCHES OR MORE.
5. REMOVAL: WHEN UPSLOPE AREAS ARE STABILIZED, THE STRUCTURE AND ANY ACCUMULATED SEDIMENT WILL BE REMOVED.

SEDIMENT BARRIER – SILT FENCE

NOT TO SCALE

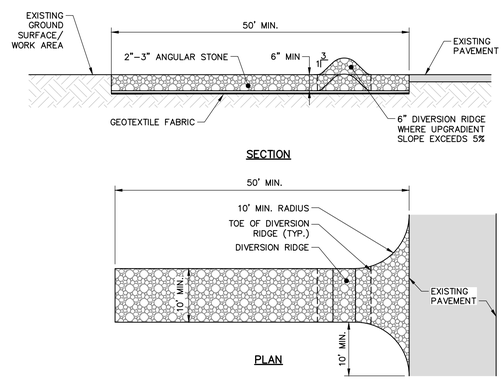

NOTES:

1. GRADE TOWARDS SEDIMENT BARRIER WHEN NECESSARY TO MANAGE FLOW.
2. INCREASE MINIMUM LENGTH TO 100' WHERE TRACKED SEDIMENTS CONTAIN LESS THAN 80% SAND OR AS NECESSARY FOR HEAVY CONSTRUCTION.

STABILIZED CONSTRUCTION ENTRANCE/EXIT

NOT TO SCALE

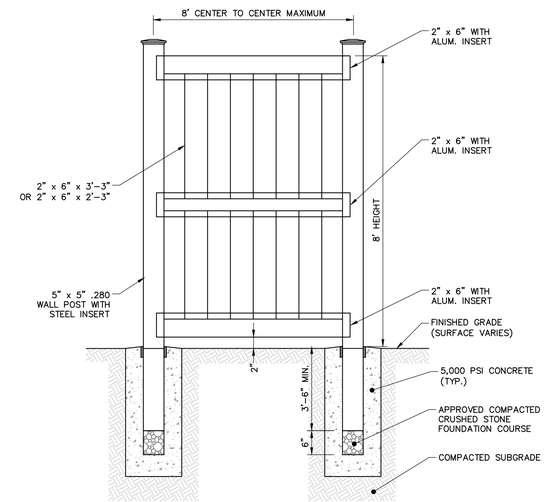

NOTE:

1. FENCE TO BE PLACED AROUND DUMPSTER PAD TO PROVIDE ADEQUATE SCREENING OF TRASH CONTAINERS. SEE PLANS FOR LOCATION.

PVC PRIVACY FENCE FOR DUMPSTER ENCLOSURE

NOT TO SCALE

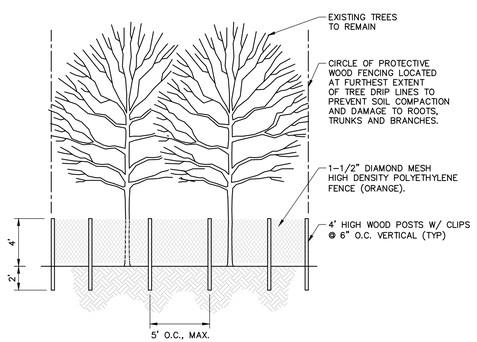

NOTES:

1. LOCATE FENCING AS SHOWN ON PLANS.
2. NO MATERIAL OR EQUIPMENT SHALL BE STORED OR STOCKPILED WITHIN THE AREA SURROUNDED BY TREE PROTECTION FENCING.
3. FENCE MUST REMAIN AND BE MAINTAINED THROUGHOUT ENTIRE BUILDING PHASES DURING WHICH CONSTRUCTION MAY AFFECT TREES.

TREE PROTECTION

NOT TO SCALE

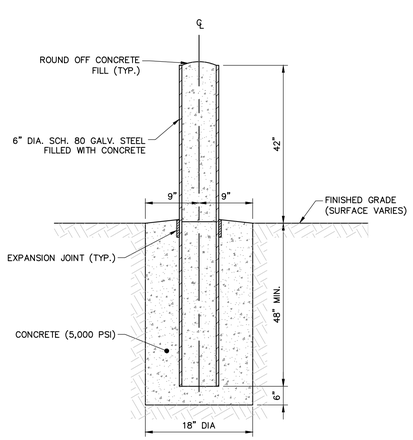

NOTE:

1. ALL BOLLARDS SHALL BE PAINTED. COLOR SELECTED BY OWNER.

6" DIA. BOLLARD

NOT TO SCALE

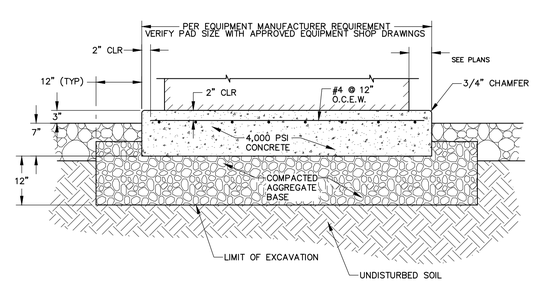

NOTE:

1. PAD REQUIREMENTS TO BE COORDINATED WITH UTILITY OWNER AND OR EQUIPMENT MANUFACTURER.

UTILITY PAD DETAIL

NOT TO SCALE

Woodard & Curran
250 Royall Street Suite 200E
Canton, Massachusetts 02021
800.446.5518 | www.woodardcurran.com

THIS DOCUMENT IS THE PROPERTY OF WOODARD & CURRAN AND ITS CLIENT. REPRODUCTION OR MODIFICATION WITHOUT WRITTEN PERMISSION IS PROHIBITED.

PE SEAL:

ISSUE FOR PERMIT

CLIENT INFO:
TOWN OF SCITUATE, MASSACHUSETTS
453 CHIEF JUSTICE CUSHING HIGHWAY

STEARNS MEADOW DRINKING WATER TREATMENT PLANT

REV	MM/DD/YY	DESCRIPTION

JOB NO:	0233681.02
DATE:	AUGUST 10, 2023
SCALE:	AS SHOWN
DESIGNED BY:	JC
DRAWN BY:	MB
CHECKED BY:	SK
FILENAME:	0233681.02 C-90X.dwg

DRAWING TITLE:

CIVIL DETAILS 1

DRAWING NO:

C-900

\\woodardcurran.net\shared\Projects\0233681.02 scituate ma stearns meadow wtp - design\wtp\Drawings\Civil\PERMITTING\0233681.02 C-90X.dwg, Aug 09, 2023 - 6:22pm MBROWN

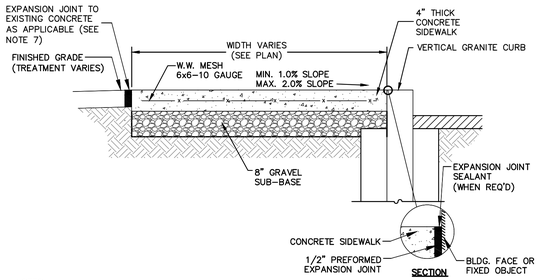

NOTES:

1. PROVIDE EXPANSION JOINTS AT MIN. 30 FT. O.C. WITH PRE– MOLDED JOINT FILLER.
2. PROVIDE CONTROL JOINTS AT 6' O.C.
3. PROVIDE BROOM FINISH IN DIRECTION PERPENDICULAR TO CURB.
4. CEMENT CONCRETE SHALL BE 4000 PSI–TYPE II.
5. EXISTING GRAVEL SUB–BASE TO REMAIN IN AREAS WHERE NO TRENCHING IS PROPOSED.
6. SEE ROADWAY/SIDEWALK RECONSTRUCTION DETAIL FOR GRAVEL APPLICATION IN AREAS OF PROPOSED TRENCHING.
7. EXPANSION JOINT NOT REQUIRED WHERE SIDEWALK ABUTS NON–PAVED AREAS (SEE PLANS FOR LOCATIONS).

TYPICAL CEMENT CONCRETE SIDEWALK DETAIL

NOT TO SCALE

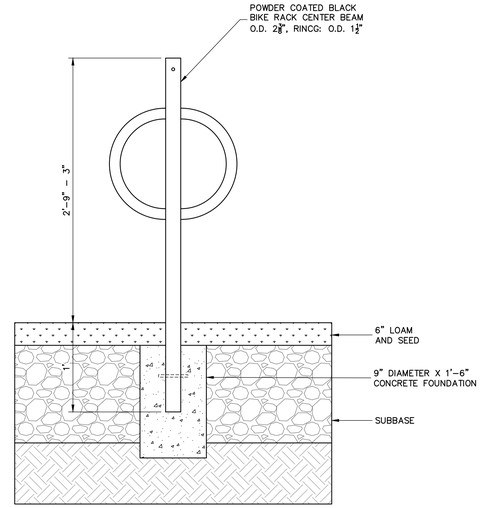

NOTES:

1. TWO (2) BICYCLE PARKING SPACE ARE BEING PROVIDED PER THE TOWN OF SCITUATE REGULATIONS. SEE PLANS FOR BICYCLE PARKING SPACES.

BICYCLE PARKING SPACES

NOT TO SCALE

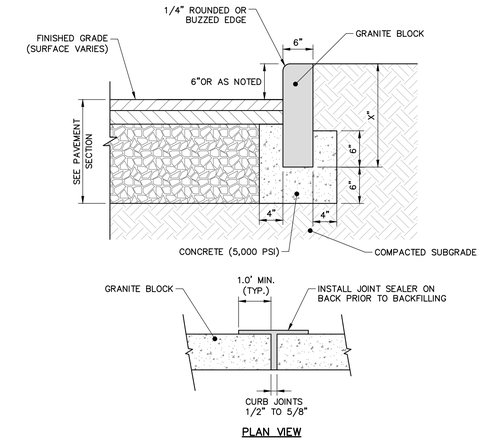

VERTICAL GRANITE CURB

NOT TO SCALE

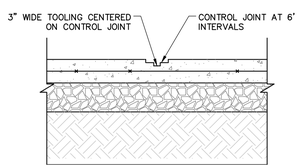

SIDEWALK CONTROL JOINT

NOT TO SCALE

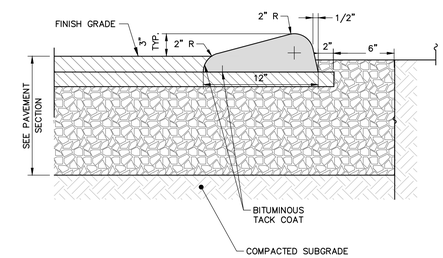

BITUMINOUS CAPE COD BERM

NOT TO SCALE

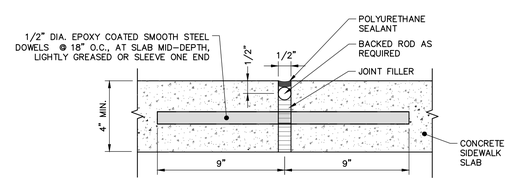

NOTES:

1. EXPANSION JOINTS SHALL BE 30' O.C.
2. DISCONTINUE REINFORCING AT EACH SIDE OF JOINT.
3. DOWELS SHALL BE CUT STRAIGHT AND DEBURRED.

CONCRETE SIDEWALK EXPANSION JOINT

NOT TO SCALE

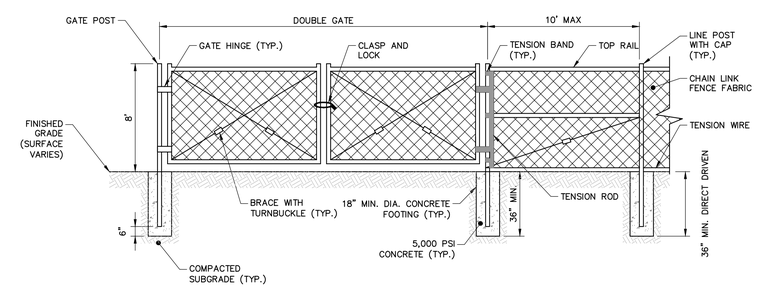

NOTES:

1. ALL FENCING AND HARDWARE TO BE LIST MATERIAL.
2. INSTALL ALL FENCING AND HARDWARE IN ACCORDANCE WITH MANUFACTURER'S INSTRUCTIONS.

CHAIN LINK FENCE AND GATE

NOT TO SCALE

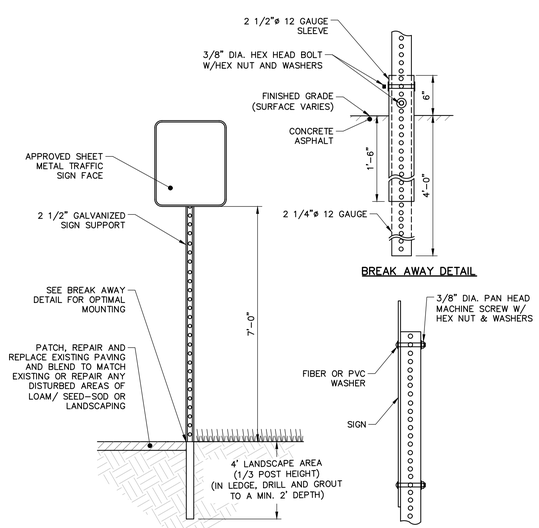

NOTES:

1. ALL HARDWARE SHALL BE STAINLESS STEEL.
2. FOR USE WITH MUTCD "STOP" AND "DO NOT ENTER" SIGNS.

TRAFFIC SIGN POST

NOT TO SCALE

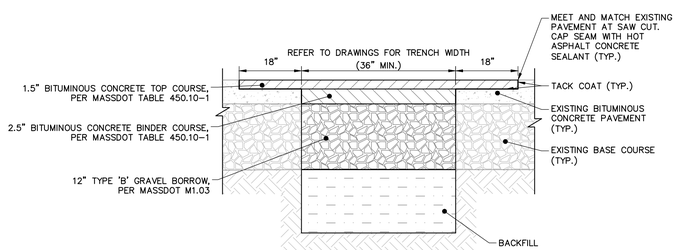

PERMANENT TRENCH REPAIR FOR PUBLIC ROADS

NOT TO SCALE

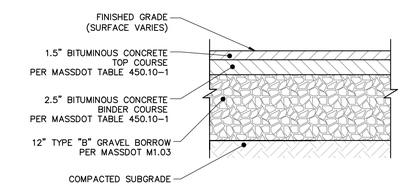

BITUMINOUS CONCRETE PAVEMENT SECTION

NOT TO SCALE

Woodard & Curran
250 Royall Street Suite 200E
Canton, Massachusetts 02021
800.446.5518 | www.woodardcurran.com

THIS DOCUMENT IS THE PROPERTY OF WOODARD & CURRAN AND ITS CLIENT. REPRODUCTION OR MODIFICATION WITHOUT WRITTEN PERMISSION IS PROHIBITED.

PE SEAL:

COMMONWEALTH OF MASSACHUSETTS
KEVIN A. MCCAFFERY
No. 48778
REGISTERED PROFESSIONAL ENGINEER

ISSUE FOR PERMIT

CLIENT INFO:
TOWN OF SCITUATE, MASSACHUSETTS
453 CHIEF JUSTICE CUSHING HIGHWAY

STEARNS MEADOW DRINKING WATER TREATMENT PLANT

REV	MM/DD/YY	DESCRIPTION

JOB NO:	0233681.02
DATE:	AUGUST 10, 2023
SCALE:	AS SHOWN
DESIGNED BY:	JC
DRAWN BY:	MB
CHECKED BY:	SK
FILENAME:	0233681.02 C-90X.dwg

DRAWING TITLE:

CIVIL DETAILS 2

DRAWING NO:

C-901

\\wooddarcurran.net\shared\Projects\0233681.02-scituate ma stearns meadow wtp - design\wtp\Drawings\Civil\PERMITTING\0233681.02 C-90X.dwg, Aug 09, 2023 - 6:23pm MBROWN

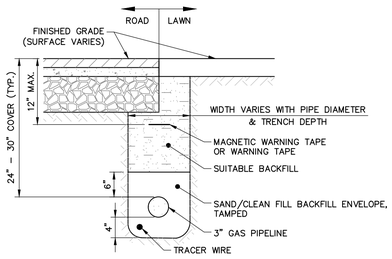

GAS PIPE TRENCH

NOT TO SCALE

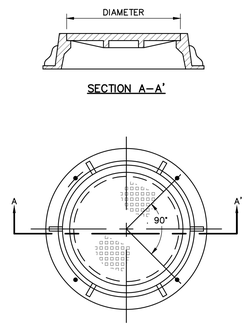

MANHOLE FRAME AND COVER

NOT TO SCALE

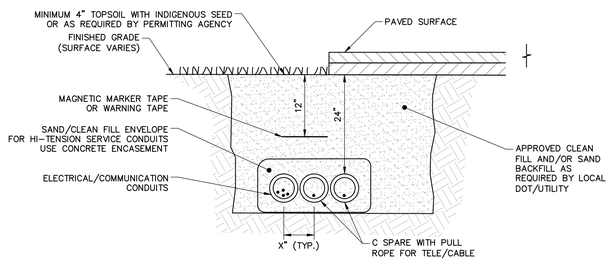

NOTES:

1. MAINTAIN 18" CLEAR BETWEEN ELECTRICAL/COMMUNICATION CONDUITS AND GAS PIPING.
2. EXCAVATE, REMOVE ROCK, BACKFILL, SEED AND RESTORE GRASS OR PAVEMENT TO ORIGINAL CONDITIONS.

ELECTRIC AND COMMUNICATIONS TRENCH

NOT TO SCALE

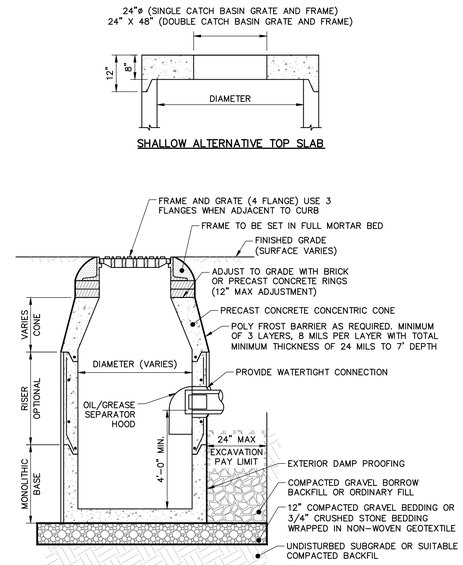

NOTES:

1. PRECAST CONCRETE STRUCTURES AND CASTINGS SHALL BE SUITABLE FOR HS–20 LOADINGS.
2. PRECAST CONCRETE STRUCTURES SHALL BE MANUFACTURED IN ACCORDANCE WITH ASTM C–478.
3. ALTERNATE TOP SLAB MAY BE USED AS DICTATED BY DESIGN AND/OR FIELD CONDITIONS.
4. JOINT SEALANT BETWEEN PRECAST SECTIONS SHALL BE BUTYL RUBBER.
5. DOUBLE CATCH BASIN FRAME AND GRATE SHALL BE INSTALLED ON A MINIMUM 5'–0" DIAMETER TOP SLAB.
6. PROVIDE MINIMUM 24" DIAMETER OPENING.
7. PROVIDE ANTIFLOATATION SLAB EXTENSION AS REQUIRED TO SATISFY ANTIFLOATATION REQUIREMENTS.

PRECAST CONCRETE CATCH BASIN

NOT TO SCALE

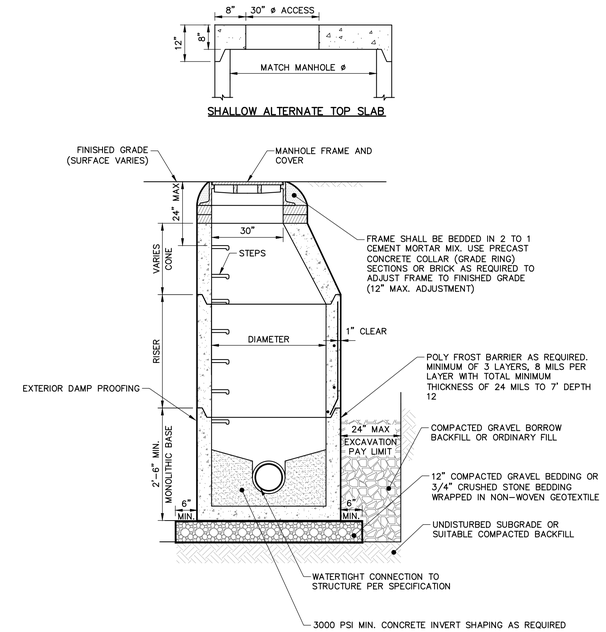

NOTES:

1. PRECAST CONCRETE STRUCTURES AND CASTINGS SHALL BE SUITABLE FOR HS–20 LOADINGS.
2. PRECAST CONCRETE STRUCTURES SHALL BE MANUFACTURED IN ACCORDANCE WITH ASTM C–478.
3. ALTERNATE TOP SLAB MAY BE USED AS DICTATED BY DESIGN AND/OR FIELD CONDITIONS.
4. MANHOLE FRAME AND GRATE(S) SHALL MEET MUNICIPAL AND STATE SPECIFICATIONS WHEN APPLICABLE.
5. REFER TO PROJECT SPECIFICATIONS FOR MORE DRAINAGE MANHOLE INFORMATION.
6. JOINT SEALANT BETWEEN SECTIONS SHALL BE BUTYL RUBBER.
7. PROVIDE ANTIFLOTATION SLAB EXTENSION AS REQUIRED TO SATISFY ANTIFLOTATION REQUIREMENTS.

PRECAST CONCRETE DRAINAGE MANHOLE

NOT TO SCALE

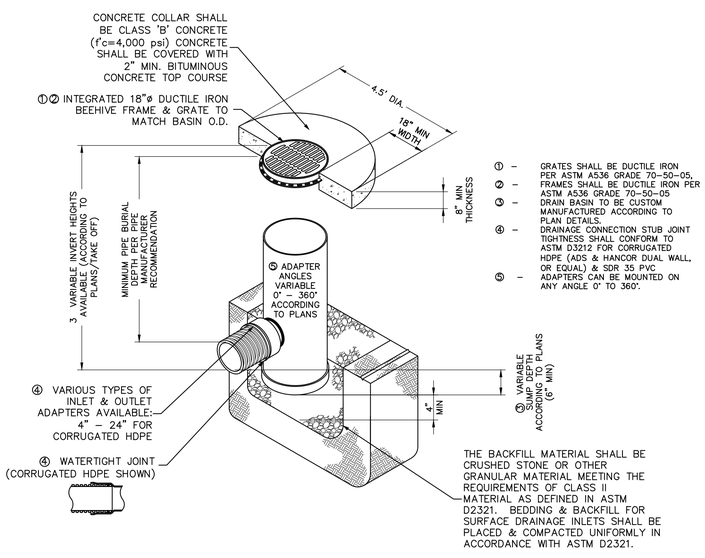

① – GRATES SHALL BE DUCTILE IRON PER ASTM A536 GRADE 70–50–05.
② – FRAMES SHALL BE DUCTILE IRON PER ASTM A536 GRADE 70–50–05
③ – DRAIN BASIN TO BE CUSTOM MANUFACTURED ACCORDING TO PLAN DETAILS.
④ – DRAINAGE CONNECTION STUB JOINT TIGHTNESS SHALL CONFORM TO ASTM D3212 FOR CORRUGATED HDPE (ADS & HANCOR DUAL WALL, OR EQUAL) & SDR 35 PVC
⑤ – ADAPTERS CAN BE MOUNTED ON ANY ANGLE 0° TO 360°.

NYLOPLAST AREA DRAIN

NOT TO SCALE

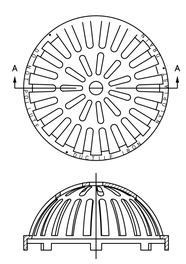

BEEHIVE GRATE

NOT TO SCALE

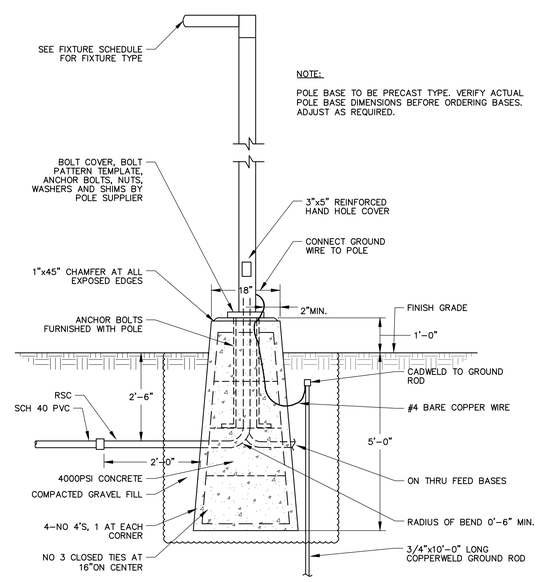

NOTE:

POLE BASE TO BE PRECAST TYPE. VERIFY ACTUAL POLE BASE DIMENSIONS BEFORE ORDERING BASES. ADJUST AS REQUIRED.

LIGHT POLE BASE

NOT TO SCALE

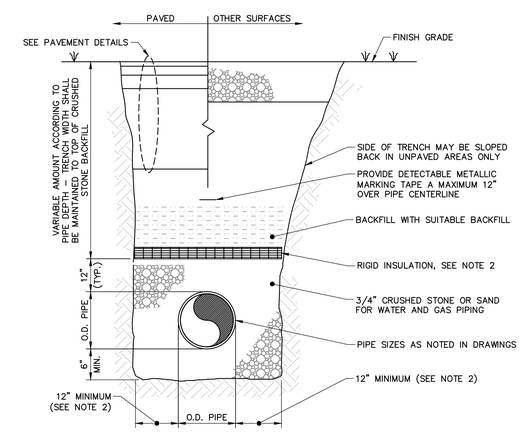

NOTES:

1. MAINTAIN UNIFORM TRENCH WIDTH TO 6" OVER PIPE.
2. PROVIDE RIGID INSULATION, 2" THICKNESS, FOR ALL PIPING WITH LESS THAN 5'–0" OF COVER TO TOP OF PIPE (WATER). EXTEND INSULATION 18" OUT FROM EDGE OF PIPE. WHERE INSULATION IS REQUIRED, TRENCH WIDTH MUST EXTEND 18" MIN. FROM OUTSIDE EDGE OF PIPE.
3. BRACING AND SHEETING OR OTHER TRENCH PROTECTION TO BE PROVIDED TO MEET APPLICABLE O.S.H.A. SAFETY REGULATIONS. ALL SUCH TRENCH PROTECTION TO BE RESPONSIBILITY OF CONTRACTOR.

SINGLE PIPE TRENCH

NOT TO SCALE

Woodard & Curran
250 Royall Street Suite 200E
Canton, Massachusetts 02021
800.446.5518 | www.woodardcurran.com

THIS DOCUMENT IS THE PROPERTY OF WOODARD & CURRAN AND ITS CLIENT. REPRODUCTION OR MODIFICATION WITHOUT WRITTEN PERMISSION IS PROHIBITED.

PE SEAL:

COMMONWEALTH OF MASSACHUSETTS
KEVIN A. MCCAFFERY
No. 46778
REGISTERED PROFESSIONAL ENGINEER

ISSUE FOR PERMIT

CLIENT INFO:
TOWN OF SCITUATE, MASSACHUSETTS
453 CHIEF JUSTICE CUSHING HIGHWAY

STEARNS MEADOW DRINKING WATER TREATMENT PLANT

REV	MM/DD/YY	DESCRIPTION

JOB NO:	0233681.02
DATE:	AUGUST 10, 2023
SCALE:	AS SHOWN
DESIGNED BY:	JC
DRAWN BY:	MB
CHECKED BY:	SK
FILENAME:	0233681.02 C-90X.dwg

DRAWING TITLE:

CIVIL DETAILS 3

DRAWING NO:

C-902

\\woodardcurran.net\shared\Projects\0233681.02 scituate ma stearns meadow wtp - design\wp\Drawings\Civil\PERMITTING\0233681.02 C-90X.dwg, Aug 09, 2023 - 6:23pm MBROWN

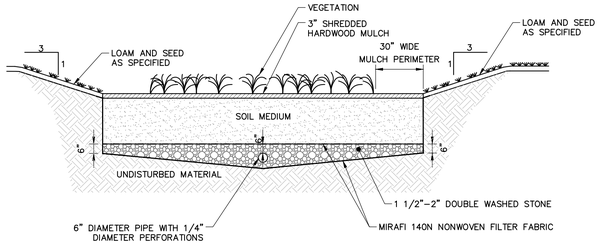

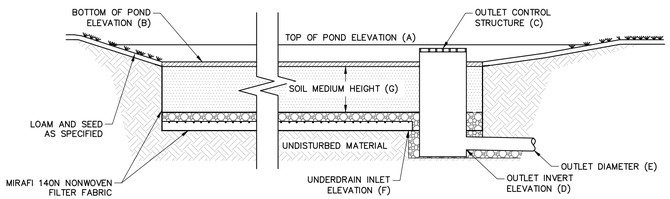

BIO-RETENTION POND SCHEDULE				
COMPONENT	1P	2P	5P	8P
TOP OF POND EL. (A)	78.00	71.00	75.00	70.00
BOTTOM OF POND EL. (B)	76.50	69.50	73.00	69.00
OUTLET CONTROL STRUCTURE EL. (C)	77.38	N/A	73.89	N/A
OUTLET INVERT EL. (D)	71.75	N/A	70.89	66.00
OUTLET DIAMETER (E)	12"	N/A	24"	6"
UNDERDRAIN INVERT EL. (F)	N/A	N/A	N/A	65.50
SOIL MEDIUM HEIGHT (G)	24"	30"	30"	30"
BOTTOM OF SOIL MEDIUM EL.	74.50	67.00	70.50	66.50
1-YEAR STORM EL.	77.41	70.48	74.03	69.88
2-YEAR STORM EL.	77.47	70.51	74.10	69.90
10-YEAR STORM EL.	77.60	70.58	74.23	69.93
100-YEAR STORM EL.	77.73	70.72	74.46	69.99
APPROX. SHGW EL.	71.00	65.00	65.90	65.90

NOTES:

1. IF UNSUITABLE MATERIAL IS OBSERVED BELOW THE POND DEPTH, AT A MINIMUM IT SHALL BE REMOVED TO A DEPTH OF TWO FEET AND REPLACED WITH CLEAN SAND AND THE ENGINEER SHOULD BE NOTIFIED.
2. SOIL WITHIN BIO-RETENTION AREA TO BE PLACED, DO NOT COMPACT, LIFTS TO BE LIGHTLY WATERED TO ENCOURAGE NATURAL COMPACTION.

BIORETENTION POND
NOT TO SCALE

SEDIMENT FOREBAY ELEVATIONS									
POND	1-YEAR STORM EL.	2-YEAR STORM EL.	10-YEAR STORM EL.	100-YEAR STORM EL.	APPROX. SHGW EL.	BERM EL.	FINISHED GRADE EL.	SEDIMENT FOREBAY BOTTOM EL.	SEDIMENT FOREBAY DEPTH (FT)
3P	76.21	76.25	76.36	76.54	65.90	76.00	77.00	74.00	2.00
6P	78.77	78.80	78.86	78.99	71.00	78.60	79.00	77.00	1.60
9P	71.65	71.68	71.76	71.90	65.00	71.50	72.00	70.00	1.50
10P	70.13	70.16	70.22	70.33	65.90	70.00	71.00	69.00	1.00

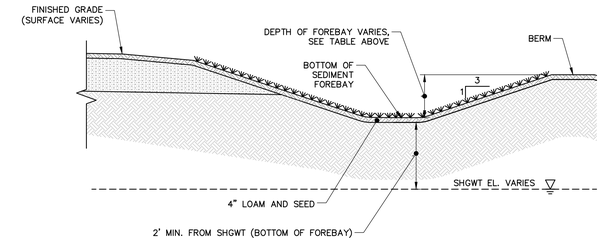

SEDIMENT FOREBAY
NOT TO SCALE

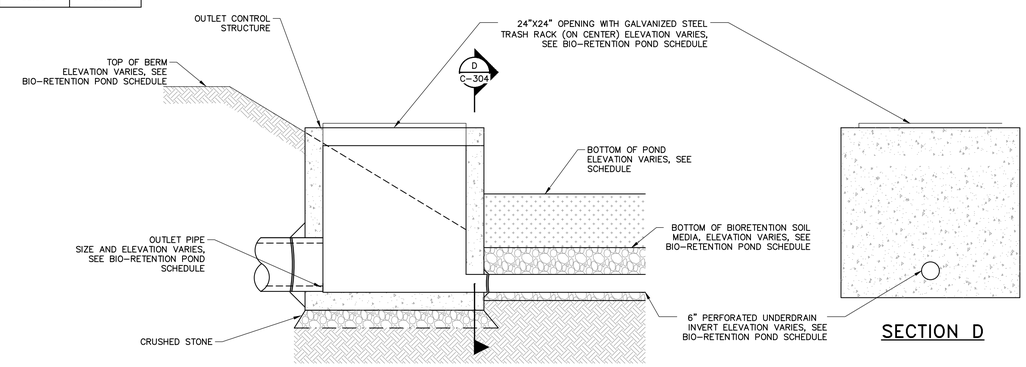

PROFILE

SECTION D

OUTLET CONTROL STRUCTURE TO BIORETENTION POND
NOT TO SCALE

DETENTION BASIN ELEVATIONS										
POND	1-YEAR STORM EL.	2-YEAR STORM EL.	10-YEAR STORM EL.	100-YEAR STORM EL.	OUTLET SIZE (IN.)	OUTLET INV.	ORIFICE SIZE (IN.)	ORIFICE INV.	BERM EL.	OUTLET CONTROL STRUCTURE EL.
4P	63.42	64.72	65.65	68.54	12	58.00	4	61.00	68.00	65.00

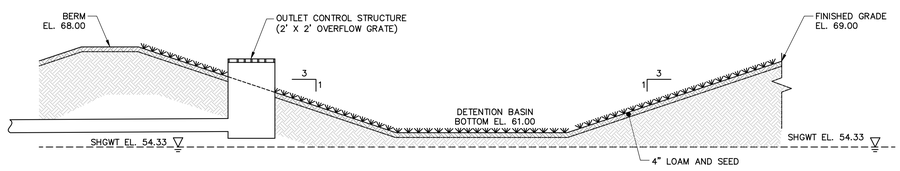

DETENTION BASIN
NOT TO SCALE

POND TYPE	PIPE DIAMETER (FT)	MEDIAN STONE DIAMETER D50 (IN)	LENGTH (FT)	DEPTH (FT)	WIDTH 1 (FT)	WIDTH 2 (FT)
DETENTION POND	1'	9"	10'	2'	5'	10'
BIORETENTION POND	0.5'	9"	10'	2'	5'	8'
UNDERDRAIN OUTLET NO. 1	1'	9"	10'	2'	5'	10'
UNDERDRAIN OUTLET NO. 2	0.5'	9"	10'	2'	5'	8'

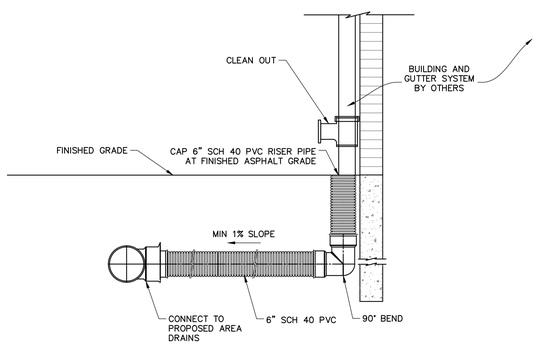

ROOF DRAIN LEADER CONNECTION
NOT TO SCALE

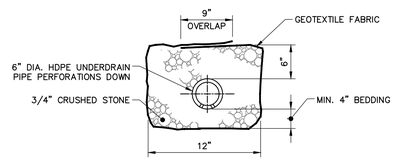

UNDERDRAIN
NOT TO SCALE

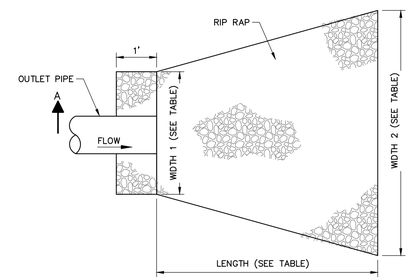

PLAN

RIPRAP APRON FOR OUTLETS
NOT TO SCALE

Woodard & Curran
250 Royall Street Suite 200E
Canton, Massachusetts 02021
800.446.5518 | www.woodardcurran.com

THIS DOCUMENT IS THE PROPERTY OF WOODARD & CURRAN AND ITS CLIENT. REPRODUCTION OR MODIFICATION WITHOUT WRITTEN PERMISSION IS PROHIBITED.

PE SEAL:

COMMONWEALTH OF MASSACHUSETTS
KEVIN A. MCCAFFERY
No. 48778
REGISTERED PROFESSIONAL ENGINEER

ISSUE FOR PERMIT

CLIENT INFO:
TOWN OF SCITUATE, MASSACHUSETTS
453 CHIEF JUSTICE CUSHING HIGHWAY

STEARNS MEADOW DRINKING WATER TREATMENT PLANT

REV	MM/DD/YY	DESCRIPTION

JOB NO:	0233681.02
DATE:	AUGUST 10, 2023
SCALE:	AS SHOWN
DESIGNED BY:	JC
DRAWN BY:	MB
CHECKED BY:	SK
FILENAME:	0233681.02 C-90X.dwg

DRAWING TITLE:
CIVIL DETAILS 4

DRAWING NO:
C-903

\\woodardcuran.net\shared\Projects\0233681.02 scituate ma stearns meadow wtp - design\wip\Drawings\Civil\PERMITTING\0233681.02 C-90X.dwg, Aug 09, 2023 - 6:23pm MBROWN

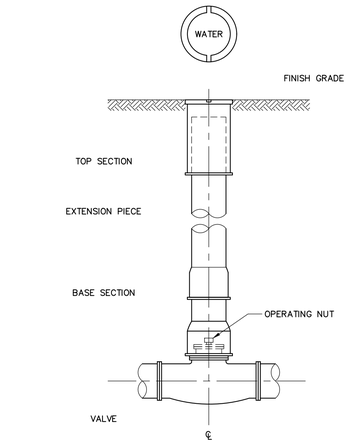

GATE VALVE WITH VALVE BOX

NOT TO SCALE

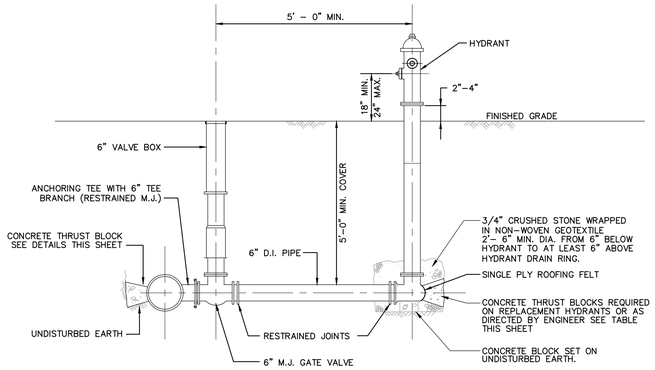

ELEVATION

NOTES:

1. ALL HYDRANT, VALVE AND TEE JOINTS TO BE RESTRAINED BY MECHANICAL JOINTS.
2. HYDRANT LATERALS SHALL BE CONSTRUCTED FROM ONE CONTINUOUS PIPE LENGTH. LATERALS LONGER THAN ONE PIPE LENGTH SHALL USE SOLID SLEEVES BETWEEN PIPES. HYDRANT LATERALS WITH BELL JOINTS AND COUPLINGS SHALL NOT BE ACCEPTED.
3. PROVIDE THRUST BLOCK WITH MINIMUM BEARING AREA OF 12 SQUARE FEET.
4. ALL BURIED PIPE, VALVES, AND JOINTS SHALL BE POLYETHYLENE ENCASED.

HYDRANT

NOT TO SCALE

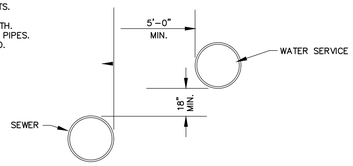

UNUSUAL CONDITION PARALLEL INSTALLATION

NOTES:

THE SEPARATION OF WATER MAINS AND SEWERS SHALL COMPLY WITH THE FOLLOWING GENERAL REQUIREMENTS.

A. PARALLEL INSTALLATION:

1. NORMAL CONDITIONS: THE INSIDE EDGE OF A WATER MAIN SHALL BE LAID AT LEAST 10 FEET HORIZONTALLY FROM THE INSIDE EDGE OF ANY SANITARY SEWER, STORM SEWER OR SEWER MANHOLE.
2. UNUSUAL CONDITIONS: WHEN LOCAL CONDITIONS PREVENT A HORIZONTAL SEPARATION OF 10 FEET, THE INSIDE EDGE OF A WATER MAIN MAY BE LAID A MINIMUM OF 5 FEET FROM THE INSIDE EDGE OF A SEWER PROVIDED THAT THE BOTTOM OF THE WATER MAIN IS AT LEAST 18 INCHES HIGHER THAN THE TOP OF THE SEWER.

B. CROSSINGS:

1. NORMAL CONDITIONS: WHENEVER POSSIBLE, THE BOTTOM OF THE WATER MAIN SHALL BE AT LEAST 18 INCHES HIGHER THAN THE TOP OF THE SEWER.
2. UNUSUAL CONDITIONS: IF A WATER MAIN MUST CROSS UNDER A SEWER, THE TOP OF THE WATER MAIN SHALL BE AT LEAST 18 INCHES LOWER THAN THE BOTTOM OF THE SEWER, THE WATER MAIN PIPE SHALL BE CENTERED AT THE CROSSING SO THAT THE JOINTS ARE EQUIDISTANT AND AS FAR AS POSSIBLE FROM THE SEWER, AND ADEQUATE STRUCTURAL SUPPORT SHALL BE PROVIDED FOR THE SEWER TO PREVENT EXCESSIVE DEFLECTION OF THE SEWER AT THE CROSSING.

WATER MAIN AND STORM OR SANITARY SEPARATION

NOT TO SCALE

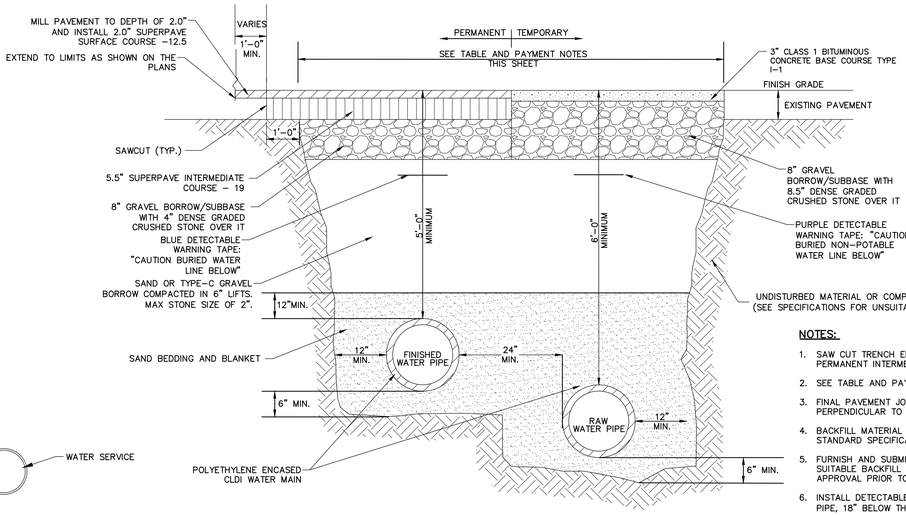

NOTES:

1. SAW CUT TRENCH EDGES PRIOR TO EXCAVATING AND FOR PERMANENT INTERMEDIATE COURSE INSTALLATION.
2. SEE TABLE AND PAYMENT NOTES FOR PAY LIMITS.
3. FINAL PAVEMENT JOINTS SHALL BE SQUARE AND PERPENDICULAR TO THE DIRECTION OF TRAVEL.
4. BACKFILL MATERIAL SHALL CONFORM TO THE MASSDOT STANDARD SPECIFICATIONS FOR HIGHWAYS AND BRIDGES.
5. FURNISH AND SUBMIT A SAMPLE OF THE PROPOSED SUITABLE BACKFILL MATERIAL TO MASSDOT FOR APPROVAL PRIOR TO EXCAVATION WITHIN ROUTE 3A.
6. INSTALL DETECTABLE WARNING TAPE DIRECTLY OVER THE PIPE, 18" BELOW THE FINISHED GRADE.
7. NUCLEAR DENSITY COMPACTION TESTING SHALL BE COMPLETED BY A MASSDOT APPROVED AGENCY.
8. TRENCHES SHALL BE PAVED BY THE END OF EACH WORKDAY.

TYPICAL TRENCH & PAVEMENT DETAIL FOR PARALLEL PIPE INSTALLATION

NOT TO SCALE

TRENCH, PAVEMENT & ROCK WIDTH PAY LIMITS (FT.)

TRENCH DEPTH	NOMINAL PIPE DIAMETER (D)	TRENCH WIDTH	TEMPORARY TRENCH WIDTH PAVEMENT	PERMANENT 5.5" INTERMEDIATE COURSE TRENCH WIDTH PAVEMENT	PERMANENT 2.0" TOP COURSE TRENCH WIDTH PAVEMENT	ROCK EXCAVATION
0 TO 12'	0 TO 24"	7' – 0"	7' – 0"	9' – 0"	AS SHOWN ON PLANS	7' – 0"

PAYMENT NOTES:

1. PAYMENT FOR ROCK REMOVAL SHALL INCLUDE REMOVAL UP TO 6–INCHES BELOW THE BOTTOM OF THE NEW PIPE.

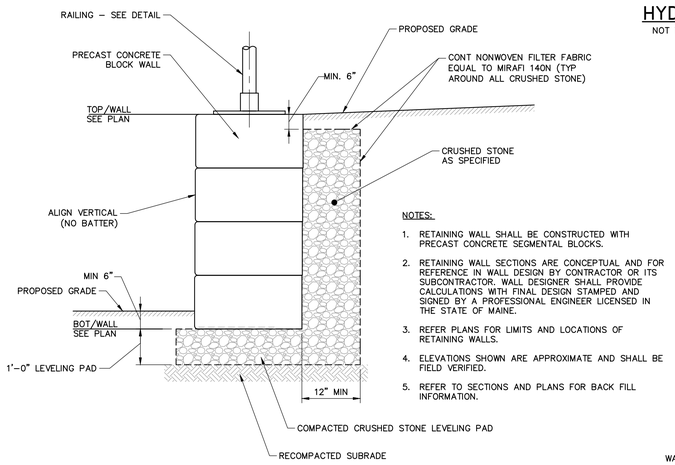

NOTES:

1. RETAINING WALL SHALL BE CONSTRUCTED WITH PRECAST CONCRETE SEGMENTAL BLOCKS.
2. RETAINING WALL SECTIONS ARE CONCEPTUAL AND FOR REFERENCE IN WALL DESIGN BY CONTRACTOR OR ITS SUBCONTRACTOR. WALL DESIGNER SHALL PROVIDE CALCULATIONS WITH FINAL DESIGN STAMPED AND SIGNED BY A PROFESSIONAL ENGINEER LICENSED IN THE STATE OF MAINE.
3. REFER PLANS FOR LIMITS AND LOCATIONS OF RETAINING WALLS.
4. ELEVATIONS SHOWN ARE APPROXIMATE AND SHALL BE FIELD VERIFIED.
5. REFER TO SECTIONS AND PLANS FOR BACK FILL INFORMATION.

RETAINING WALL DETAIL

SCALE: NOT TO SCALE

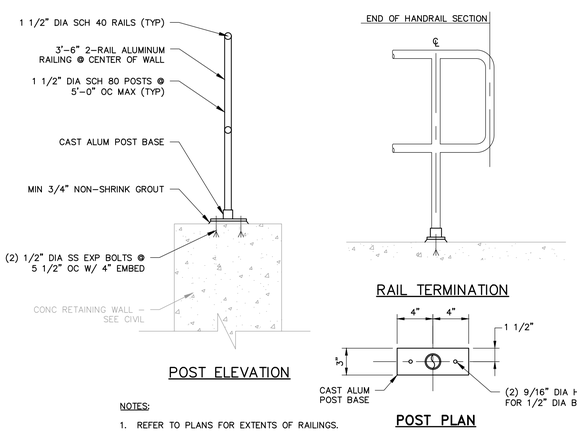

POST ELEVATION

RAIL TERMINATION

POST PLAN

NOTES:

1. REFER TO PLANS FOR EXTENTS OF RAILINGS.
2. MINIMUM CLEARANCE BETWEEN RAILING SECTIONS SHALL BE 3" PER OSHA 29 CFR 1910.23(e)(6).

RAILING DETAIL

N.T.S.

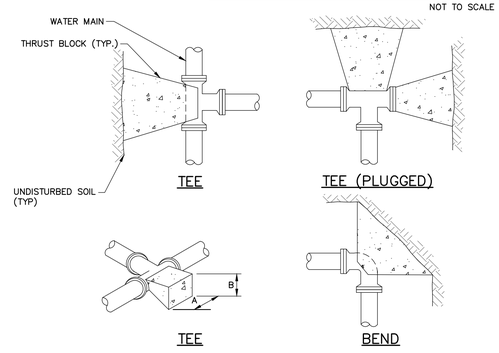

TABLE 1: 4" THRU 10" FITTINGS				
SOIL TYPE	TEES		BENDS	
	A	B	A	B
SOFT CLAY	48"	24"	48"	24"
SAND	24"	24"	24"	24"
GRAVEL	24"	18"	24"	18"

TABLE 2: 12" THRU 16" FITTINGS				
SOIL TYPE	TEES		BENDS	
	A	B	A	B
SOFT CLAY	60"	36"	72"	36"
SAND	36"	30"	48"	30"
GRAVEL	30"	24"	40"	24"

NOTES:

1. CONCRETE FOR ALL THRUST BLOCKS TO BE MINIMUM 3,000 PSI., 28 DAY STRENGTH, TYPE I CEMENT, 3/4" STONE.
2. WHERE POSSIBLE, CONSTRUCT THRUST BLOCKS AGAINST UNDISTURBED SOIL. WHERE NOT POSSIBLE PLACE FILL BETWEEN THE THRUST BLOCK AND THE UNDISTURBED SOIL COMPACTED TO 90% STANDARD PROCTOR DENSITY.
3. WRAP FITTINGS WITH POLYETHYLENE PRIOR TO CONSTRUCTING THRUST BLOCKS. NO JOINTS SHALL BE COVERED WITH CONCRETE.
4. THRUST BLOCK DIMENSIONS ARE BASED ON A MAXIMUM WATER MAIN PRESSURE OF 150 PSI.

TYPICAL THRUST BLOCK

NOT TO SCALE

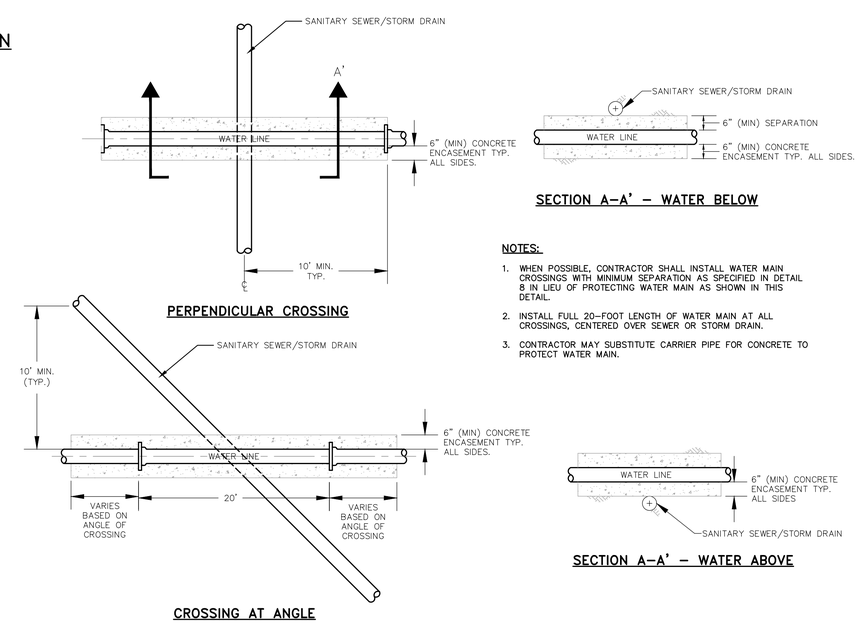

PERPENDICULAR CROSSING

SECTION A–A' – WATER BELOW

NOTES:

1. WHEN POSSIBLE, CONTRACTOR SHALL INSTALL WATER MAIN CROSSINGS WITH MINIMUM SEPARATION AS SPECIFIED IN DETAIL 8 IN LIEU OF PROTECTING WATER MAIN AS SHOWN IN THIS DETAIL.
2. INSTALL FULL 20–FOOT LENGTH OF WATER MAIN AT ALL CROSSINGS, CENTERED OVER SEWER OR STORM DRAIN.
3. CONTRACTOR MAY SUBSTITUTE CARRIER PIPE FOR CONCRETE TO PROTECT WATER MAIN.

CROSSING AT ANGLE

SECTION A–A' – WATER ABOVE

WATER MAIN AND STORM OR SANITARY CROSSING ENCASEMENT

NOT TO SCALE

Woodard & Curran
250 Royall Street Suite 200E
Canton, Massachusetts 02021
800.446.5518 | www.woodardcurran.com

THIS DOCUMENT IS THE PROPERTY OF WOODARD & CURRAN AND ITS CLIENT. REPRODUCTION OR MODIFICATION WITHOUT WRITTEN PERMISSION IS PROHIBITED.

PE SEAL:

COMMONWEALTH OF MASSACHUSETTS
KEVIN A. MCCAFFERY
No. 48778
REGISTERED PROFESSIONAL ENGINEER

ISSUE FOR PERMIT

CLIENT INFO:
TOWN OF SCITUATE, MASSACHUSETTS
453 CHIEF JUSTICE CUSHING HIGHWAY

STEARNS MEADOW DRINKING WATER TREATMENT PLANT

REV	MM/DD/YY	DESCRIPTION

JOB NO:	0233681.02
DATE:	AUGUST 10, 2023
SCALE:	AS SHOWN
DESIGNED BY:	JC
DRAWN BY:	MB
CHECKED BY:	SK/KM
FILENAME:	0233681.02 C-90X.dwg

DRAWING TITLE:

CIVIL DETAILS 5

DRAWING NO:

C-904

\\woodardcurran.net\shared\Projects\0233681.02 scituate ma stearns meadow wtp - design\wip\Drawings\Civil\PERMITTING\0233681.02 C-90X.dwg, Aug 09, 2023 - 6:23pm MBROWN

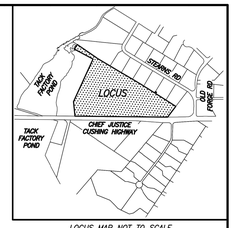

LOCUS MAP NOT TO SCALE

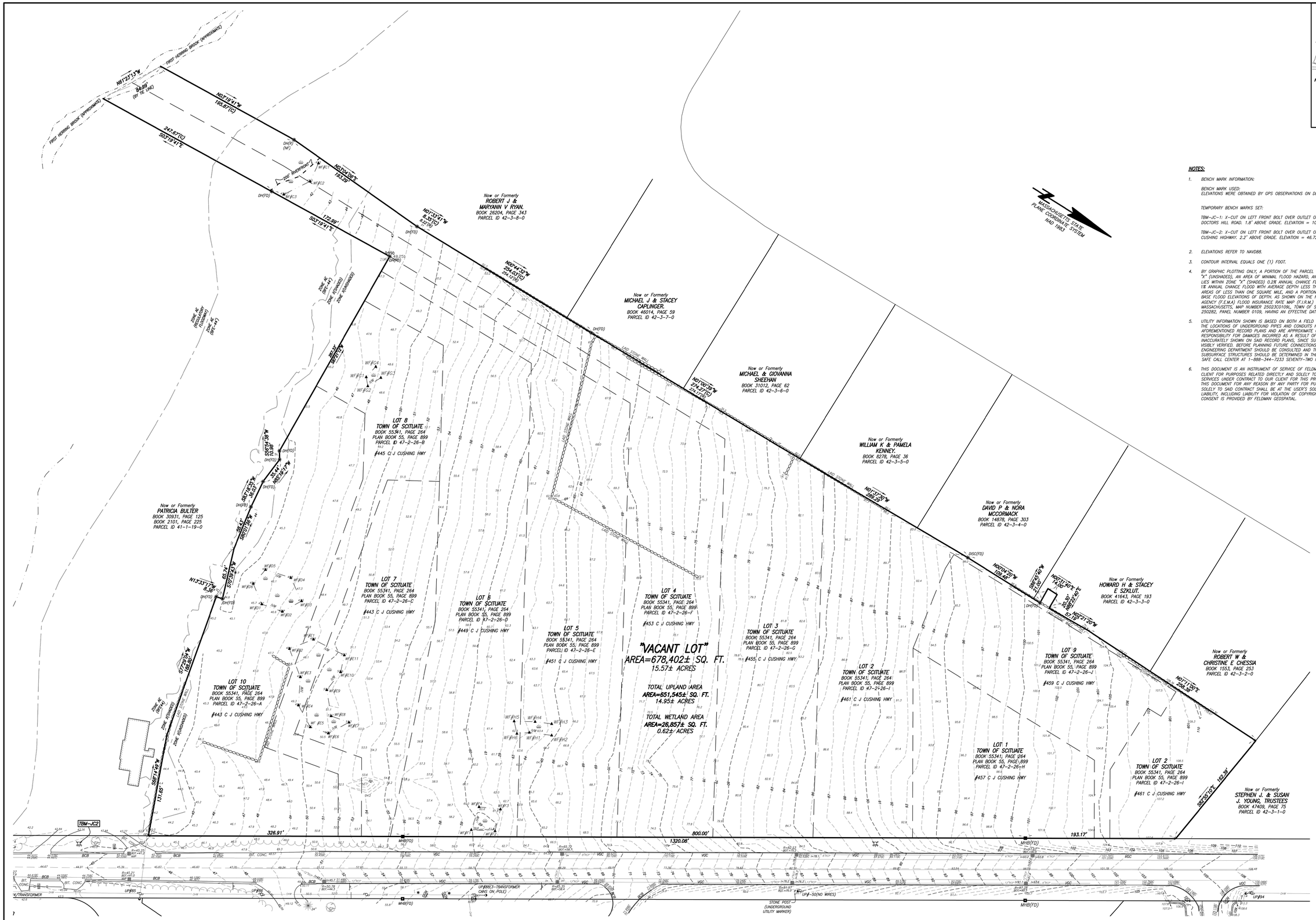

NOTES:

1. BENCH MARK INFORMATION:

   BENCH MARK USED:
   ELEVATIONS WERE OBTAINED BY GPS OBSERVATIONS ON DECEMBER 8, 2021.

   TEMPORARY BENCH MARKS SET:

   TBM-JC-1: X-CUT ON LEFT FRONT BOLT OVER OUTLET OF HYDRANT ON NORTH OF DOCTORS' HILL ROAD. 1.8' ABOVE GRADE. ELEVATION = 106.87

   TBM-JC-2: X-CUT ON LEFT FRONT BOLT OVER OUTLET OF HYDRANT IN FRONT OF 439 CUSHING HIGHWAY. 2.2' ABOVE GRADE. ELEVATION = 46.72

2. ELEVATIONS REFER TO NAVD88.

3. CONTOUR INTERVAL EQUALS ONE (1) FOOT.

4. BY GRAPHIC PLOTTING ONLY, A PORTION OF THE PARCEL SHOWN HEREON LIES WITHIN ZONE "X" (UNSHADED), AN AREA OF MINIMAL FLOOD HAZARD, AND A PORTION OF THE PARCEL LIES WITHIN ZONE "X" (SHADED) 0.2% ANNUAL CHANCE FLOOD HAZARD, AND ALSO AREAS OF 1% ANNUAL CHANCE FLOOD WITH AVERAGE DEPTH LESS THAN ONE FOOT OR WITH DRAINAGE AREAS OF LESS THAN ONE SQUARE MILE, AND A PORTION LIES WITHIN ZONE "AE" WITH BASE FLOOD ELEVATIONS OF DEPTH, AS SHOWN ON THE FEDERAL EMERGENCY MANAGEMENT AGENCY (F.E.M.A) FLOOD INSURANCE RATE MAP (F.I.R.M.) FOR PLYMOUTH COUNTY, MASSACHUSETTS, MAP NUMBER 25023C0109L, TOWN OF SCITUATE COMMUNITY NUMBER 250282, PANEL NUMBER 0109, HAVING AN EFFECTIVE DATE OF JULY 6, 2021.

5. UTILITY INFORMATION SHOWN IS BASED ON BOTH A FIELD SURVEY AND PLANS OF RECORD. THE LOCATIONS OF UNDERGROUND PIPES AND CONDUITS HAVE BEEN DETERMINED FROM THE AFOREMENTIONED RECORD PLANS AND ARE APPROXIMATE ONLY. WE CANNOT ASSUME RESPONSIBILITY FOR DAMAGES INCURRED AS A RESULT OF UTILITIES THAT ARE OMITTED OR INACCURATELY SHOWN ON SAID RECORD PLANS, SINCE SUBSURFACE UTILITIES CANNOT BE VISIBLY VERIFIED. BEFORE PLANNING FUTURE CONNECTIONS, THE PROPER UTILITY ENGINEERING DEPARTMENT SHOULD BE CONSULTED AND THE ACTUAL LOCATION OF SUBSURFACE STRUCTURES SHOULD BE DETERMINED IN THE FIELD. CALL, TOLL FREE, THE DIG SAFE CALL CENTER AT 1-888-344-7233 SEVENTY-TWO HOURS PRIOR TO EXCAVATION.

6. THIS DOCUMENT IS AN INSTRUMENT OF SERVICE OF FELDMAN GEOSPATIAL ISSUED TO OUR CLIENT FOR PURPOSES RELATED DIRECTLY AND SOLELY TO FELDMAN GEOSPATIAL'S SCOPE OF SERVICES UNDER CONTRACT TO OUR CLIENT FOR THIS PROJECT. ANY USE OR REUSE OF THIS DOCUMENT FOR ANY REASON BY ANY PARTY FOR PURPOSES UNRELATED DIRECTLY AND SOLELY TO SAID CONTRACT SHALL BE AT THE USER'S SOLE AND EXCLUSIVE RISK AND LIABILITY, INCLUDING LIABILITY FOR VIOLATION OF COPYRIGHT LAWS, UNLESS WRITTEN CONSENT IS PROVIDED BY FELDMAN GEOSPATIAL.

LEGEND

- ■ · · · · · · · BOUND FOUND
- (C) · · · · · · CALCULATED
- DH · · · · · · DRILL HOLE
- FD · · · · · · FOUND
- NTS · · · · · · NOT TO SCALE
- R= · · · · · · RADIUS OR RIM ELEVATION
- (R) · · · · · · RECORD
- (REC) · · · · · RECORD
- SQ. FT. · · · · SQUARE FEET
- TBM · · · · · · TEMPORARY BENCH MARK
- WF-## · · · · · WETLAND FLAG NUMBER
- WETLANDS
- ▲ · · · · · · WETLAND FLAG

REFERENCES:

PLYMOUTH COUNTY REGISTRY OF DEEDS

PLAN BOOK 29, PAGE 684
PLAN BOOK 11, PAGE 993
PLAN BOOK 55, PAGE 899

DEED BOOK 55341, PAGE 264

RECORD OWNER:

Now or Formerly
TOWN OF SCITUATE
BOOK 55341, PAGE 264

I CERTIFY THAT THIS PLAN IS BASED ON AN ACTUAL FIELD SURVEY AND THE LATEST PLANS AND DEEDS OF RECORD.

MARK J. GUERARD JR., PLS (MA# 51815) — 03-14-2022
MGUERARD@FELDMANGEO.COM — DATE

COMMONWEALTH OF MASSACHUSETTS — MARK J. GUERARD, JR. No.51815 — REGISTERED PROFESSIONAL LAND SURVEYOR

03-14-2022	ADDED WETLAND SERIES 'G' AND 'H'

EXISTING CONDITIONS PLAN
443-461 CHEIF JUSTICE CUSHING HIGHWAY
SCITUATE, MASS.

FELDMAN LAND SURVEYORS
152 HAMPDEN STREET
BOSTON, MASS. 02119
PHONE: (617)357-9740
www.feldmansurveyors.com

DECEMBER 9, 2021

FELDMAN LAND SURVEYORS

40 0 20 40 80 120

SCALE: 1"=40'

RESEARCH	FIELD CHIEF	PROJ MGR	APPROVED	SHEET NO. 1 OF 1
CALC	CADD	FIELD CHECKED	CRD FILE 2100927	JOB NO. 2100927

FILENAME: S:\PROJECTS\2021\2100927\DWG\2100927-EC.dwg

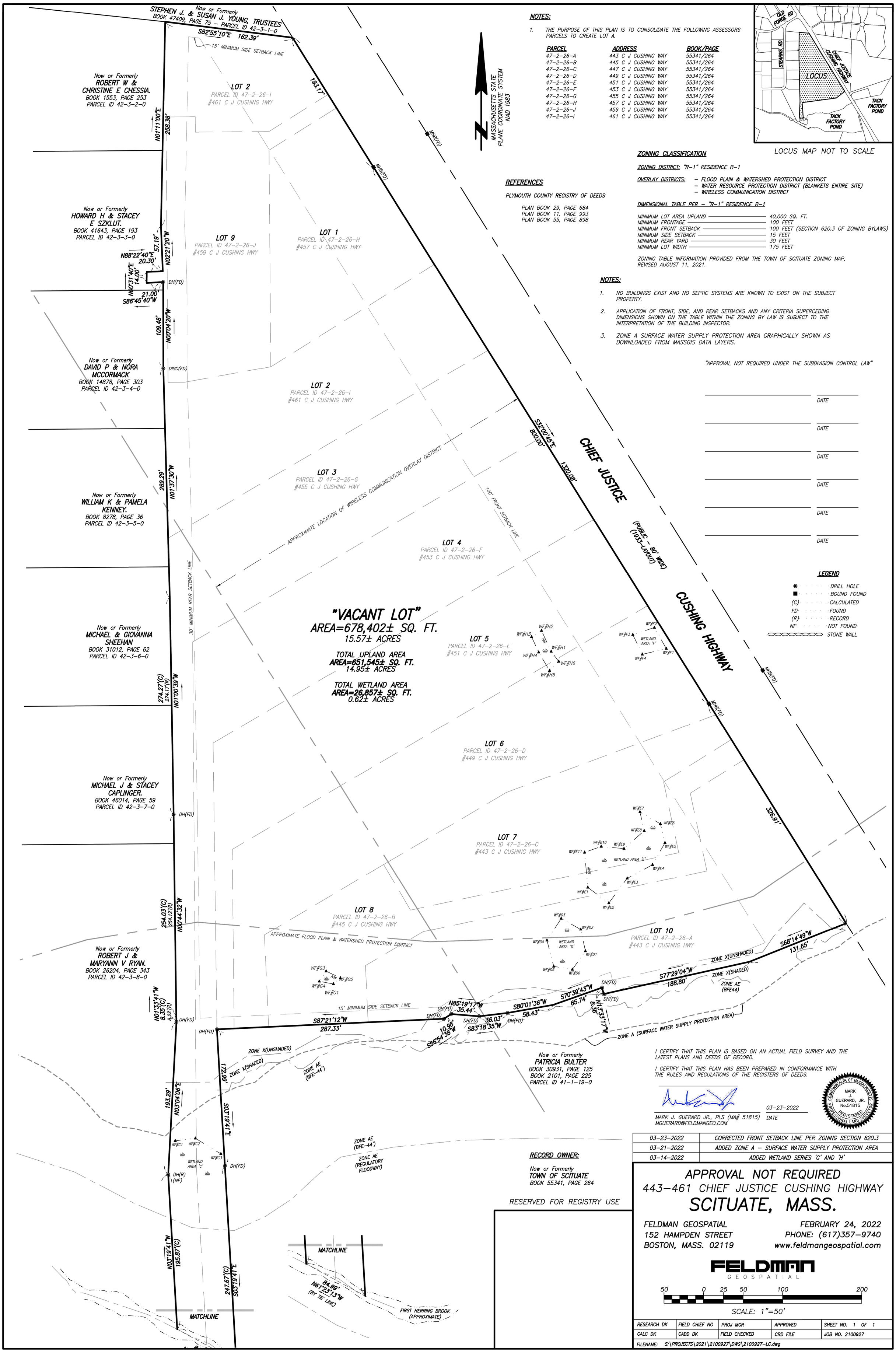

NOTES:

1. THE PURPOSE OF THIS PLAN IS TO CONSOLIDATE THE FOLLOWING ASSESSORS PARCELS TO CREATE LOT A.

PARCEL	ADDRESS	BOOK/PAGE
47–2–26–A	443 C J CUSHING WAY	55341/264
47–2–26–B	445 C J CUSHING WAY	55341/264
47–2–26–C	447 C J CUSHING WAY	55341/264
47–2–26–D	449 C J CUSHING WAY	55341/264
47–2–26–E	451 C J CUSHING WAY	55341/264
47–2–26–F	453 C J CUSHING WAY	55341/264
47–2–26–G	455 C J CUSHING WAY	55341/264
47–2–26–H	457 C J CUSHING WAY	55341/264
47–2–26–J	459 C J CUSHING WAY	55341/264
47–2–26–I	461 C J CUSHING WAY	55341/264

REFERENCES

PLYMOUTH COUNTY REGISTRY OF DEEDS

PLAN BOOK 29, PAGE 684
PLAN BOOK 11, PAGE 993
PLAN BOOK 55, PAGE 898

ZONING CLASSIFICATION

ZONING DISTRICT: "R–1" RESIDENCE R–1

OVERLAY DISTRICTS:
- FLOOD PLAIN & WATERSHED PROTECTION DISTRICT
- WATER RESOURCE PROTECTION DISTRICT (BLANKETS ENTIRE SITE)
- WIRELESS COMMUNICATION DISTRICT

DIMENSIONAL TABLE PER – "R–1" RESIDENCE R–1

MINIMUM LOT AREA UPLAND	40,000 SQ. FT.
MINIMUM FRONTAGE	100 FEET
MINIMUM FRONT SETBACK	100 FEET (SECTION 620.3 OF ZONING BYLAWS)
MINIMUM SIDE SETBACK	15 FEET
MINIMUM REAR YARD	30 FEET
MINIMUM LOT WIDTH	175 FEET

ZONING TABLE INFORMATION PROVIDED FROM THE TOWN OF SCITUATE ZONING MAP, REVISED AUGUST 11, 2021.

NOTES:

1. NO BUILDINGS EXIST AND NO SEPTIC SYSTEMS ARE KNOWN TO EXIST ON THE SUBJECT PROPERTY.
2. APPLICATION OF FRONT, SIDE, AND REAR SETBACKS AND ANY CRITERIA SUPERCEDING DIMENSIONS SHOWN ON THE TABLE WITHIN THE ZONING BY LAW IS SUBJECT TO THE INTERPRETATION OF THE BUILDING INSPECTOR.
3. ZONE A SURFACE WATER SUPPLY PROTECTION AREA GRAPHICALLY SHOWN AS DOWNLOADED FROM MASSGIS DATA LAYERS.

"APPROVAL NOT REQUIRED UNDER THE SUBDIVISION CONTROL LAW"

DATE
DATE
DATE
DATE
DATE
DATE

I CERTIFY THAT THIS PLAN IS BASED ON AN ACTUAL FIELD SURVEY AND THE LATEST PLANS AND DEEDS OF RECORD.

I CERTIFY THAT THIS PLAN HAS BEEN PREPARED IN CONFORMANCE WITH THE RULES AND REGULATIONS OF THE REGISTERS OF DEEDS.

MARK J. GUERARD JR., PLS (MA# 51815)
MGUERARD@FELDMANGEO.COM

03–23–2022
DATE

COMMONWEALTH OF MASSACHUSETTS
MARK J. GUERARD, JR.
No.51815
REGISTERED PROFESSIONAL LAND SURVEYOR

RECORD OWNER:

Now or Formerly
TOWN OF SCITUATE
BOOK 55341, PAGE 264

RESERVED FOR REGISTRY USE

03–23–2022	CORRECTED FRONT SETBACK LINE PER ZONING SECTION 620.3
03–21–2022	ADDED ZONE A – SURFACE WATER SUPPLY PROTECTION AREA
03–14–2022	ADDED WETLAND SERIES 'G' AND 'H'

APPROVAL NOT REQUIRED
443–461 CHIEF JUSTICE CUSHING HIGHWAY
SCITUATE, MASS.

FELDMAN GEOSPATIAL
152 HAMPDEN STREET
BOSTON, MASS. 02119

FEBRUARY 24, 2022
PHONE: (617)357–9740
www.feldmangeospatial.com

FELDMAN GEOSPATIAL

50 0 25 50 100 200

SCALE: 1"=50'

RESEARCH DK	FIELD CHIEF NG	PROJ MGR	APPROVED	SHEET NO. 1 OF 1
CALC DK	CADD DK	FIELD CHECKED	CRD FILE	JOB NO. 2100927

FILENAME: S:\PROJECTS\2021\2100927\DWG\2100927–LC.dwg

24x36

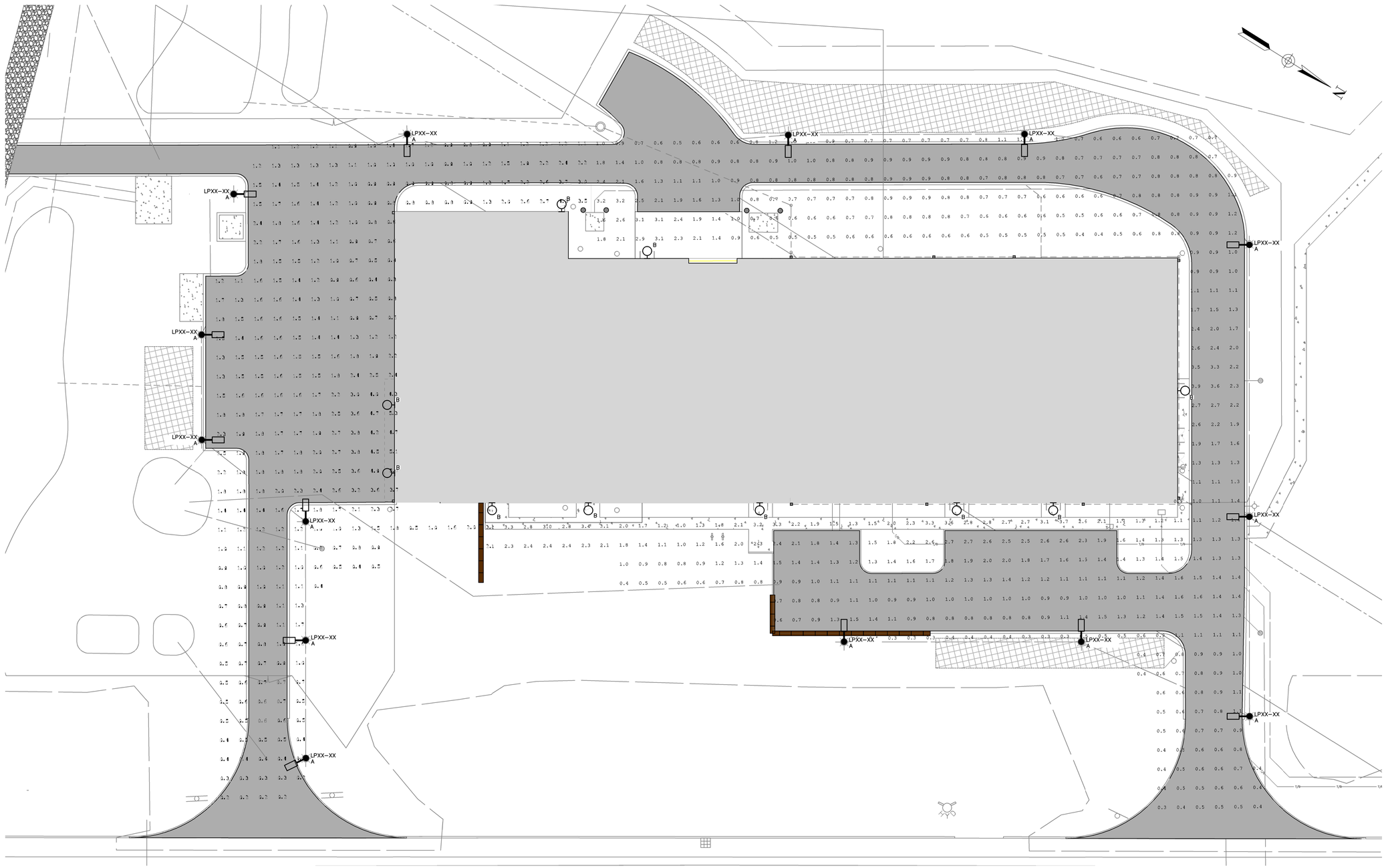

FIXTURE SCHEDULE

ALL FIXTURES SHALL BE FURNISHED COMPLETE WITH ALL HARDWARE, LAMPS, HANGERS, FITTINGS, ETC., FOR A COMPLETE AND PROPER INSTALLATION.

TYPE	MANUFACTURER	CATALOG NUMBER	LAMP TYPE	LAMP WATT	COLOR TEMP	VOLTAGE	MTG.	BALLAST FACTOR	REMARKS/RECOMMENDATIONS
	OUTDOOR AREA LIGHTING								
A	COOPER LIGHTING	FIXTURE: STREETWORKS GLAN GALLEON PN: GLAN–SA1C–730–U–SL3–MA–GM	LED	67	3000K	120/277V	POLE	NA	FIXTURE SHALL ME MOUNTED TO 30FT ABOVE GRADE ON SQUARE STEEL POLE.
B	COOPER LIGHTING	FIXTURE: MCGRAW–EDISON GWC GALLEON WALL PN: GWC–SA1B–730–U–T4FT–GM–UPL	LED	44	3000K	120/277V	WALL	NA	FIXTURE SHALL ME MOUNTED TO 14FT ABOVE GRADE ON EXTERIOR WALL OF FACILTY ABOVE DOORWAYS.

LIGHTING CALCULATIONS

ILLUMINANCE VALUES (FOOT–CANDLES)

AVERAGE: 01.30 Fc
MAXIMUM: 05.70 Fc
MINIMUM: 00.20 Fc
AVG/MIN: 06.50 Fc
MAX/MIN: 28.50 Fc

20' 0 20' 40'

BAR SCALE
1" = 20'
CHECK GRAPHIC SCALE BEFORE USING

Woodard & Curran
250 Royall Street Suite 200E
Canton, Massachusetts 02021
800.446.5518 | www.woodardcurran.com

THIS DOCUMENT IS THE PROPERTY OF WOODARD & CURRAN AND ITS CLIENT. REPRODUCTION OR MODIFICATION WITHOUT WRITTEN PERMISSION IS PROHIBITED.

PE SEAL:

ISSUE FOR PERMIT

CLIENT INFO:

TOWN OF SCITUATE
MASSACHUSETTS

STEARNS MEADOW DRINKING WATER TREATMENT PLANT

REV	MM/DD/YY	DESCRIPTION

JOB NO:	0233681.02
DATE:	FEBRUARY 2023
SCALE:	XXX
DESIGNED BY:	PFH
DRAWN BY:	SPB
CHECKED BY:	----
FILENAME:	0233681.02 EL-2-101.dwg

DRAWING TITLE:

ELECTRICAL

LIGHTING PLAN 1 - SM WATER TREATMENT PLANT

DRAWING NO:

EL-2-101

\\wocadcurran.net\Shared\Projects\0233681.02 Scituate MA Stearns Meadow WTP - Design\wip\Drawings\Electrical\0233681.02 EL-2-101.dwg, Aug 09, 2023 - 4:44pm NHIBLUAT

24x36

PLANTING NOTES

1. NO SUBSTITUTIONS OF PLANT SPECIES WITHOUT CONTRACTOR SUBMITTAL APPROVAL BY OWNER'S REPRESENTATIVE
2. LOCATE AND VERIFY UTILITY LINE LOCATIONS PRIOR TO STAKING AND REPORT CONFLICT TO OWNER'S REPRESENTATIVE.
3. NO PLANTING TO BE INSTALLED BEFORE ACCEPTANCE OF ROUGH GRADING.
4. ALL PROPOSED TREE LOCATIONS SHALL BE STAKED OR LAID OUT IN THEIR APPROXIMATE LOCATION BY THE CONTRACTOR. REFER TO LAYOUT AND PLANTING SHEETS FOR LAYOUT INFORMATION. THE CONTRACTOR SHALL ADJUST THE LOCATIONS AS REQUESTED BY THE OWNER'S REPRESENTATIVE ACCOUNT FOR SUBSURFACE UTILITIES AND OTHER FIELD CONDITIONS. FINAL LOCATIONS OF ALL PLANTS MUST BE APPROVED BY THE OWNER'S REPRESENTATIVE PRIOR TO PLANTING.
5. TOTAL QUANTITY OF PLANTS FOR EACH AREA TO BE AVAILABLE ON SITE AT THE TIME OF PLANTING FOR FIELD LAYOUT BY OWNER'S REPRESENTATIVE. NO PARTIAL LAYOUT AND PLANTING OF AREAS WILL BE ACCEPTABLE.
6. INSTALL PLANTS WITH ROOT FLARES FLUSH WITH FINISHED GRADE. IMMEDIATELY REPLANT PLANTS THAT SETTLE OUT OF PLUMB OR BELOW FINISHED GRADE.
7. LOOSE OR CRACKED ROOT BALLS ARE UNACCEPTABLE.
8. REMOVE WIRE BASKETS ENTIRELY. REMOVE BURLAP ENTIRELY. SYNTHETIC BURLAP WILL NOT BE ACCEPTED. FOR CONTAINER PLANTS, REMOVE CONTAINER AND SCARIFY EDGES OF ROOT BALL 1/2" DEEP IN A MINIMUM OF FOUR LOCATIONS.
9. RAISE AND REPLANT PLANTS THAT SETTLE AFTER PLANTING AND WATERING.
10. ALL MATERIAL SHALL CONFORM TO THE GUIDELINES ESTABLISHED BY THE AMERICAN ASSOCIATION OF NURSERYMEN AS WELL AS THE TECHNICAL AND PLANTING REQUIREMENTS AS PART OF THIS PROJECT. (WWW.AMERICANHORT.ORG).
11. THE CONTRACTOR SHALL BE RESPONSIBLE FOR MONITORING AND IRRIGATING ALL PLANTINGS INSTALLED AS PART OF THIS PROJECT DURING THE ENTIRETY OF THE WARRANTY PERIOD TO ENSURE PLANT HEALTH AND LIMIT DIE-OFF.

INSTALLATION: WETLAND AND OTHER RESOURCE AREAS

PLANT PLUGS: PLUGS DIRECTLY INTO SOIL FOLLOWING SOIL PREPARATION IF REQUIRED.
ROOT BALLS: HOLE DEPTH SHALL BE THE EQUAL TO THE HEIGHT OF THE ROOT BALL. THE BASE OF THE PLANT PLANT STEM OR TRUNK SHALL BE LEVEL WITH THE SURROUNDING GROUND. THE HOLE SHALL BE (3) TIMES THE DIAMETER OF THE ROOT BALL.
SEASON: PLANTING SHALL TAKE PLACE DURING FALL OR SPRING AS REQUIRED.

13. THE CONTRACTOR SHALL MONITOR AND INSPECT RESTORATION PLANTINGS DURING ESTABLISHMENT PERIOD, ENSURE REGULAR IRRIGATION IS PROVIDED, KEEP PLANTINGS AND ENSURE PLANTING AREAS ARE FREE OF WEEDS AND INVASIVE PLANTS.
15. EROSION CONTROL WILL BE INSTALLED AS REQUIRED IN PROJECT SPECIFICATIONS AND EROSION CONTROL PLAN BY CONTRACTOR PRIOR TO ALL PLANT INSTALLATION.
16. STEEP SLOPES 3:1 OR GREATER WILL REQUIRE INSTALLATION OF BIO-DEGRADABLE EROSION CONTROL FABRIC; SUCH AS COIR MESH, COCONUT FIBER, MAY BE USED AS TEMPORARY EROSION CONTROL PRIOR TO PLANT ROOT ESTABLISHMENT. CONTRACTOR MUST SUBMIT EROSION CONTROL FOR APPROVAL BY PROJECT ENGINEER PRIOR TO INSTALLATION OR AS REQUIRED BY PROJECT DOCUMENTS.
17. TO PROTECT EXISTING WETLAND AREAS, CONTRACTOR SHALL LIMIT PEDESTRIAN AND ALL ALL VEHICLE ACCESS BY USING A SINGLE DESIGNATED WALKWAY, FENCED OFF WITH SILT OR TEMPORARY CONSTRUCTION FENCING, WALKWAY AND FENCING INSTALLED WILL SITE PROTECTIONS, PLANT INSTALLATION SHALL FOLLOW PLANTING PLAN LAYOUT, UNLESS SPECIFIED BY PROJECT ENGINEER / LANDSCAPE ARCHITECT.
19. CONTRACTOR IS RESPONSIBLE FOR MAINTAINING OR REPLACING ALL PLANTINGS OR OTHER LANDSCAPE MATERIALS THAT DO NOT MEET PROJECT REQUIREMENTS, ARE DAMAGED OR DEAD.

SOIL PREPARATION

1. COMPOST: THE CONTRACTOR SHALL MODIFY EXISTING SOIL BY SPREADING 3-4 INCHES OR COMPOST OVER THE SURFACE OF THE SOIL AND TILL INTO THE TOP 6 INCHES OF SOIL PRIOR TO ALL PLANT INSTALLATION AS REQUIRED PROJECT SPECIFICATIONS.COMPOST PRODUCTS MUST MEET COMPOSITION PRE-APPROVAL REQUIREMENTS OUTLINED IN PROJECT SPECIFICATIONS.
2. WATER SOLUBLE SLOW RELEASE FERTILIZERS SHALL BE APPLIED IN ACCORDANCE WITH PROJECT SPECIFICATIONS.

LANDSCAPE MAINTENANCE DURING ESTABLISHMENT PERIOD:

1. WATERING: CONTRACTOR IS RESPONSIBLE FOR PROVIDING AND MAINTAINING IRRIGATION SCHEDULE FOR ALL NEW PLANTING AS APPROVED BY OWNER'S REPRESENTATIVE OR PROJECT ENGINEER/ L.A.
2. CONTRACTOR SHALL PROVIDE EITHER TEMPORARY AUTOMATED SYSTEMS OR MANUAL IRRIGATION AS SPECIFIED IN CONTRACT REQUIREMENTS THROUGHOUT ENTIRE ESTABLISHMENT PERIOD.
3. ESTABLISHMENT PERIODS WILL EXTEND OVER EITHER (6)MONTHS, (1) YR. OR (2) YR. PERIOD AS OUTLINED IN CONTRACT.
4. IRRIGATION SYSTEMS ARE TO BE OPERATIONAL & MAINTAINED FROM APRIL THROUGH OCT. DURING ESTABLISHMENT & MAINTAINED BY CONTRACTOR.
5. REGULAR INVASIVE PLANT REMOVAL: CONTRACTOR IS RESPONSIBLE FOR REMOVAL OF WEED OR INVASIVE SPECIES ENCROACHMENT THOUGH OUT ESTABLISHMENT.
6. BANK STABILIZATION AND PREVENTING OF SOIL/SLOPE EROSION; CONTRACTOR IS RESPONSIBLE FOR CORRECTING & MONITORING THROUGHOUT PERIOD.
7. MAINTAIN TREE PROTECTIONS, STAKES AND PLANT TIES OR RETAINING STRUCTURES AS REQUIRED.

MULCH

1. APPLY MULCH ONLY IN AREAS INDICATED IN PROJECT DOCUMENTS. MULCH SHALL NOT BE APPLIED TO SEDIMENT AREAS, DUNES, AQUATIC OR WETLAND AREAS.
2. ALL MULCH PRODUCTS MUST BE APPROVED BY PROJECT ENGINEER OR OWNER'S REP. PRIOR TO APPLICATION.
3. ALL TREE AND SHRUB PLANTINGS SHALL BE MULCHED AROUND THE ROOT ZONE TO A DEPTH OF 3-4 INCHES.

PLANTING LIST

QTY	SYM	COMMON NAME	SIZE	NOTES
TREES				
	RB	River Birch / Betula nigra	2" to 3" CAL	B&B, Height 25'
	BF	Balsam Fir / Abies balsamea	2" to 3" CAL	B&B, Height 40'
	BH	Bitternut Hickory / Carya cordiformis	2" to 3" CAL	B&B, Height 40'
	HB	Hackberry / Celtis occidentails	2" to 3" CAL	B&B, Height 40'
	BA	Black Ash / Fraxinus	2" to 3" CAL	B&B, Height 30'
	WP	White Pine / Pinus strobus	2" to 3" CAL	B&B, Height 50'
	BO	Bur Oak / Quercus macrocarpa	2" to 3" CAL	B&B, Height 40'
	SM	Silver Maple / Acer saccharinum	2" to 3" CAL	B&B, Height 50'
	RM	Red Maple / Acer rubrum	2" to 3" CAL	B&B, Height 30'
SHRUBS				
	SB	Shadbush / Amelanchier	5 GAL, Height 20'	
	IB	Inberry / Illex Glabra	5 GAL, Height 3'	
	BB	Bayberry / Myrica	5 GAL, Height 2' to 4' '	
	WH	Witchhazel / Hamamelis virginiana	5 GAL, Height 5' to 10'	
	AZ	Azalea / Azalea	5 GAL, Height 3' to 5'	
	HB	High Bush Blueberry / Vaccinium c.	5 GAL, Height 2' to 4'	
GROUND COVER, FERNS, PERENNIALS				
		Low Native Shrub Plant Mix	3 GAL	24" OC, Height 2' to 3'
		Native Groundcover Plant Mix	2 QT	18" OC, Height .5' to 1'
		Erosion Control / Native Meadow Seed Mix	5lbs	Hydroseed Application
		Wetland Grass & Forb - Green Infrastructure Seed Mix	5lbs	Hydroseed Application

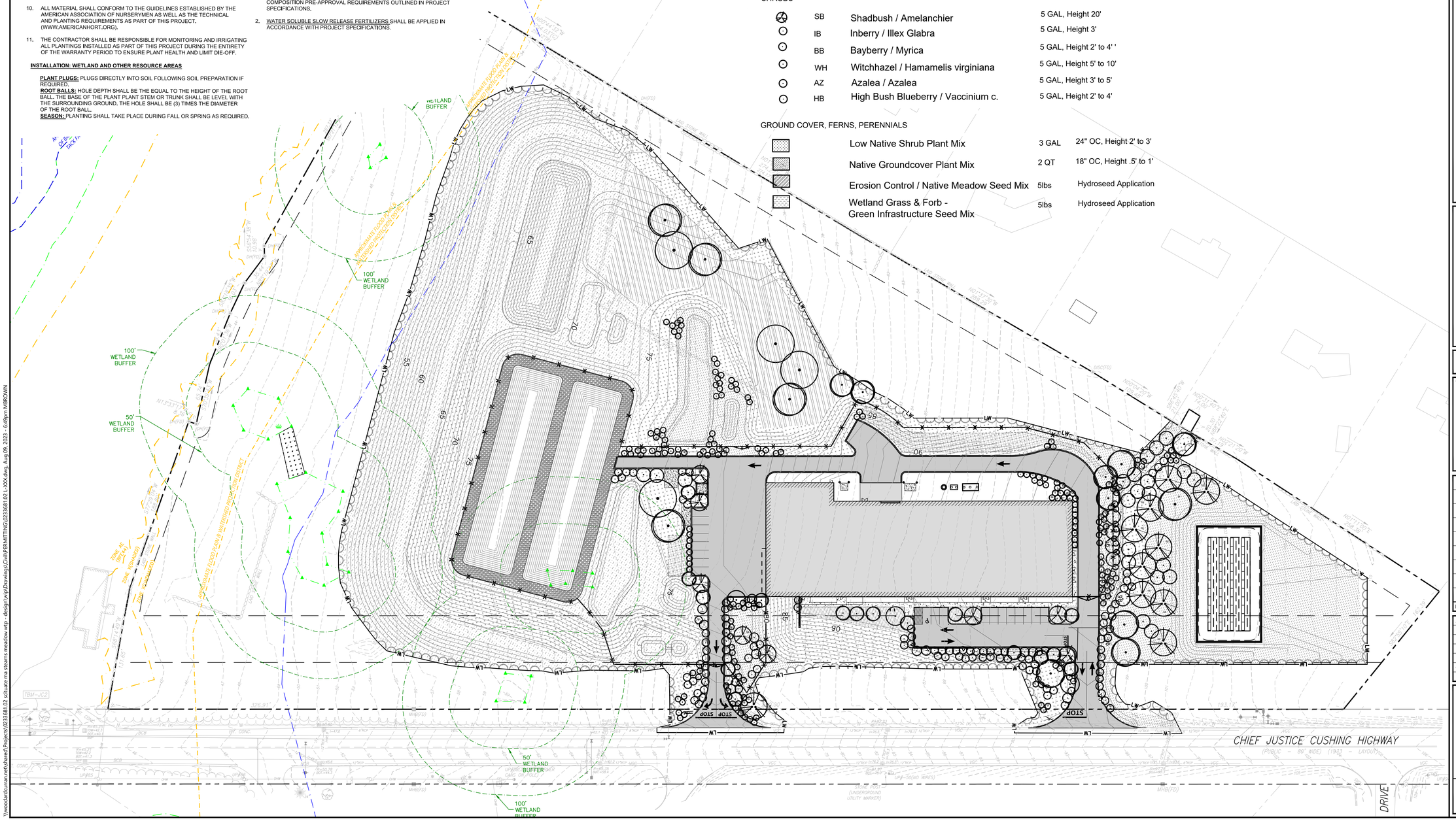

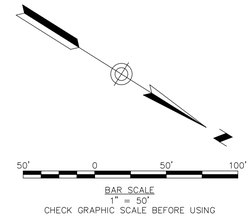

Woodard & Curran
250 Royall Street Suite 200E
Canton, Massachusetts 02021
800.446.5518 | www.woodardcurran.com

THIS DOCUMENT IS THE PROPERTY OF WOODARD & CURRAN AND ITS CLIENT. REPRODUCTION OR MODIFICATION WITHOUT WRITTEN PERMISSION IS PROHIBITED.

PE SEAL:

ISSUE FOR PERMIT

CLIENT INFO:
TOWN OF SCITUATE, MASSACHUSETTS
453 CHIEF JUSTICE CUSHING HIGHWAY

STEARNS MEADOW DRINKING WATER TREATMENT PLANT

REV	MM/DD/YY	DESCRIPTION

JOB NO:	0233681.02
DATE:	AUGUST 10, 2023
SCALE:	AS SHOWN
DESIGNED BY:	MF
DRAWN BY:	MB
CHECKED BY:	SK
FILENAME:	0233681.02 L-XXX.dwg

DRAWING TITLE:

LANDSCAPE PLANTING PLAN

DRAWING NO:

LA-101

\\woodardcurran.net\shared\Projects\0233681.02 scituate ma stearns meadow wtp - design\wip\Drawings\Civil\PERMITTING\0233681.02 L-XXX.dwg, Aug 09, 2023 - 6:49pm MBROWN

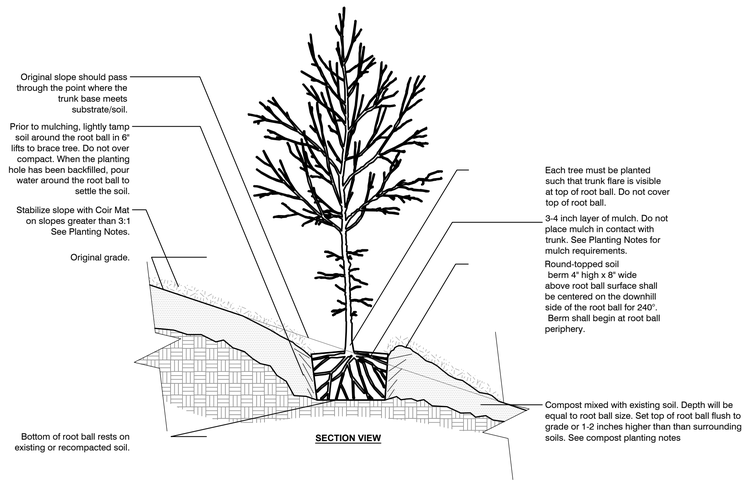

1 L-901 TREE PLANTING

SCALE N.T.S

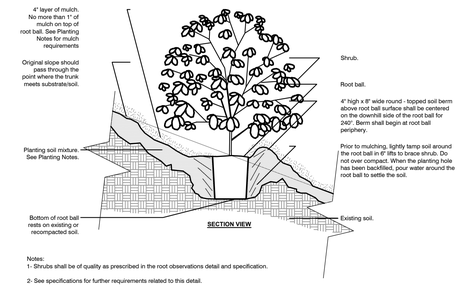

Notes:
1- Shrubs shall be of quality as prescribed in the root observations detail and specification.

2- See specifications for further requirements related to this detail.

2 L-901 SHRUB PLANTING

SCALE N.T.S

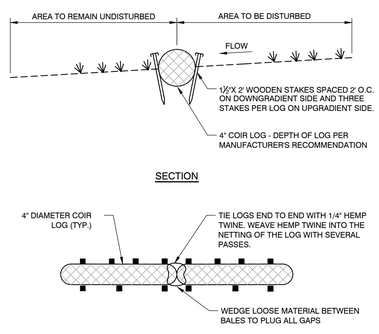

NOTE:

1. COIR LOG SIZE, STAKE SPACING AND STAKE DEPTH TO BE DETERMINED BY STATE EROSION AND SEDIMENT CONTROL MANUAL AND MANUFACTURER'S REQUIREMENTS.

4 L-901 COIR LOG

SCALE N.T.S

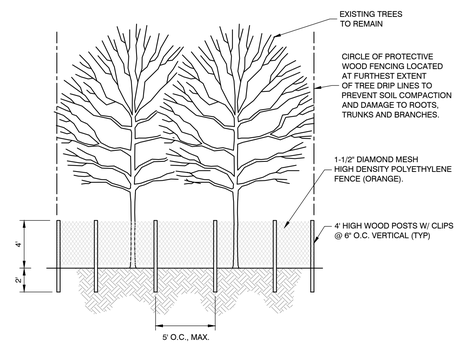

NOTES:

1. LOCATE FENCING AS SHOWN ON PLANS.
2. NO MATERIAL OR EQUIPMENT SHALL BE STORED OR STOCKPILED WITHIN THE AREA SURROUNDED BY TREE PROTECTION FENCING.
3. FENCE MUST REMAIN AND BE MAINTAINED THROUGHOUT ENTIRE BUILDING PHASES DURING WHICH CONSTRUCTION MAY AFFECT TREES.

5 L-901 TREE PROTECTION

SCALE N.T.S

Woodard & Curran
250 Royall Street Suite 200E
Canton, Massachusetts 02021
800.446.5518 | www.woodardcurran.com

THIS DOCUMENT IS THE PROPERTY OF WOODARD & CURRAN AND ITS CLIENT. REPRODUCTION OR MODIFICATION WITHOUT WRITTEN PERMISSION IS PROHIBITED.

PE SEAL:

ISSUE FOR PERMIT

CLIENT INFO:
TOWN OF SCITUATE, MASSACHUSETTS
453 CHIEF JUSTICE CUSHING HIGHWAY

STEARNS MEADOW DRINKING WATER TREATMENT PLANT

REV	MM/DD/YY	DESCRIPTION

JOB NO:	0233681.02
DATE:	AUGUST 10, 2023
SCALE:	AS SHOWN
DESIGNED BY:	MF
DRAWN BY:	MB
CHECKED BY:	SK
FILENAME:	0233681.02 L-XXX.dwg

DRAWING TITLE:

PLANTING DETAILS

DRAWING NO:

LA-901

\\woodardcuran.net\shared\Projects\0233681.02 scituate ma stearns meadow wtp - design\wip\Drawings\Civil\PERMITTING\0233681.02 L-XXX.dwg, Aug 09, 2023 - 6:49pm MBROWN

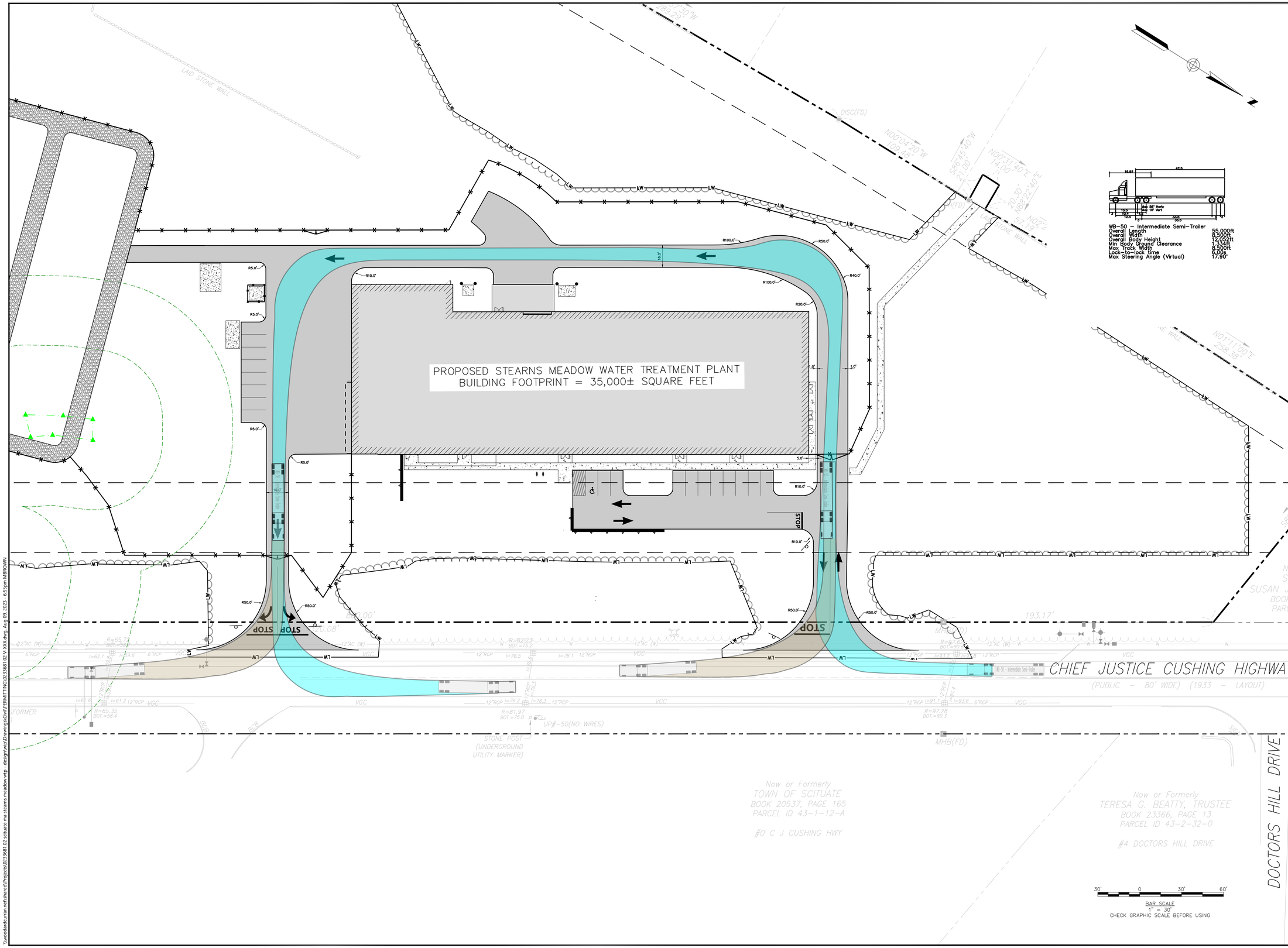

WB-50 – Intermediate Semi-Trailer

Overall Length	55.000ft
Overall Width	8.500ft
Overall Body Height	14.052ft
Min Body Ground Clearance	1.334ft
Max Track Width	8.500ft
Lock-to-lock time	6.00s
Max Steering Angle (Virtual)	17.90°

Woodard & Curran
250 Royall Street Suite 200E
Canton, Massachusetts 02021
800.446.5518 | www.woodardcurran.com

THIS DOCUMENT IS THE PROPERTY OF WOODARD & CURRAN AND ITS CLIENT. REPRODUCTION OR MODIFICATION WITHOUT WRITTEN PERMISSION IS PROHIBITED.

PE SEAL:

ISSUE FOR PERMIT

CLIENT INFO:
TOWN OF SCITUATE, MASSACHUSETTS
453 CHIEF JUSTICE CUSHING HIGHWAY

STEARNS MEADOW DRINKING WATER TREATMENT PLANT

REV	MM/DD/YY	DESCRIPTION

JOB NO:	0233681.02
DATE:	AUGUST 10, 2023
SCALE:	AS SHOWN
DESIGNED BY:	JC
DRAWN BY:	MB
CHECKED BY:	SK/KM
FILENAME:	0233681.02 V-XXX.dwg

DRAWING TITLE:

VEHICLE TURNING PLAN (WB-50)

DRAWING NO:

V-101

\\woodardcuran.net\shared\Projects\0233681.02-scituate ma s'teams meadow wtp - design\wtp\Drawings\Civil\PERMITTING\0233681.02 V-XXX.dwg, Aug 09, 2023 - 6:53pm MBROWN

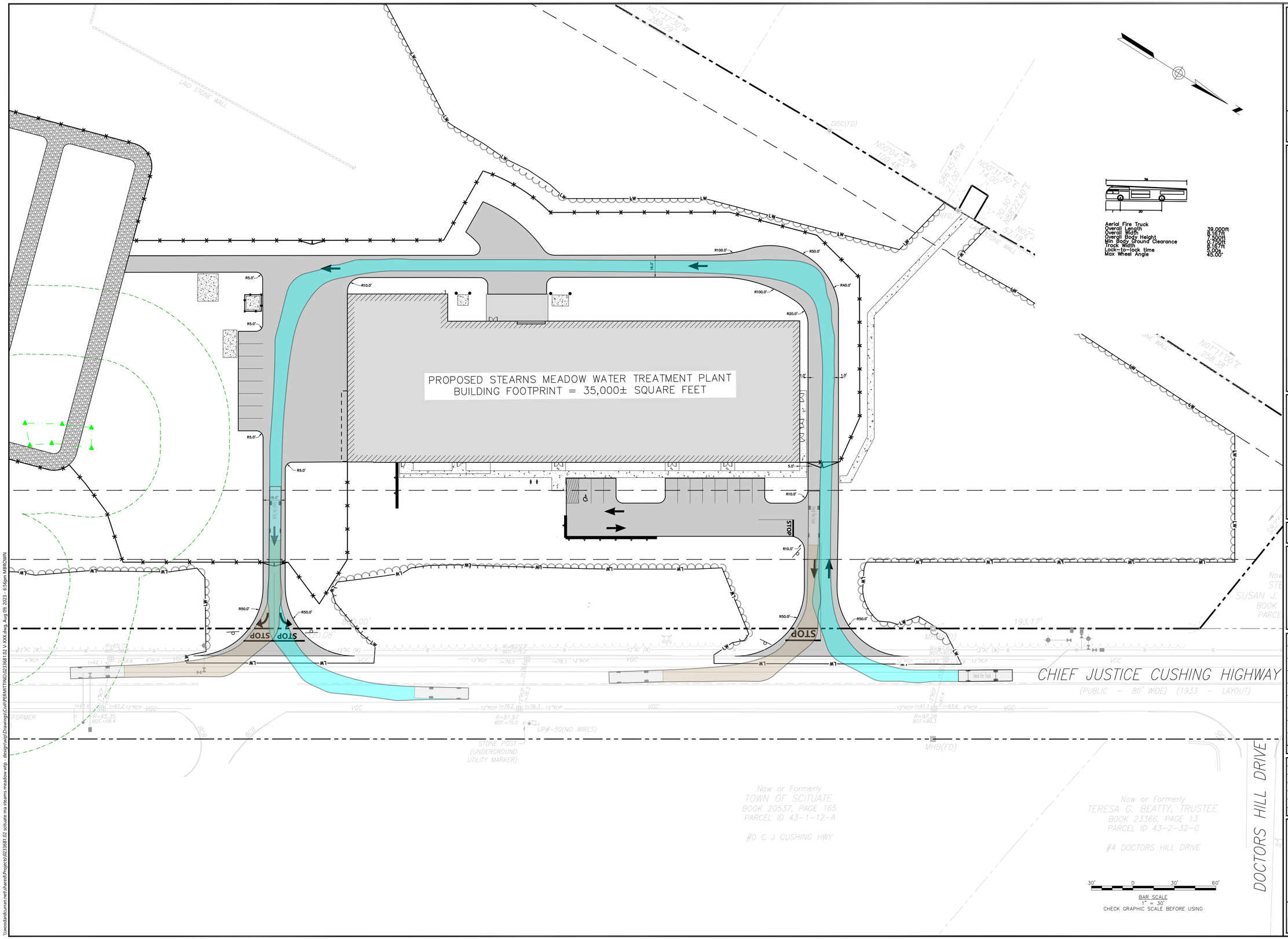

Woodard & Curran
250 Royall Street Suite 200E
Canton, Massachusetts 02021
800.446.5518 | www.woodardcurran.com

THIS DOCUMENT IS THE PROPERTY OF WOODARD & CURRAN AND ITS CLIENT. REPRODUCTION OR MODIFICATION WITHOUT WRITTEN PERMISSION IS PROHIBITED.

PE SEAL:

ISSUE FOR PERMIT

CLIENT INFO:
TOWN OF SCITUATE, MASSACHUSETTS
453 CHIEF JUSTICE CUSHING HIGHWAY

STEARNS MEADOW DRINKING WATER TREATMENT PLANT

REV	MM/DD/YY	DESCRIPTION

JOB NO:	0233681.02
DATE:	AUGUST 10, 2023
SCALE:	AS SHOWN
DESIGNED BY:	JC
DRAWN BY:	MB
CHECKED BY:	SK/KM
FILENAME:	0233681.02 V-XXX.dwg

DRAWING TITLE:

VEHICLE TURNING PLAN (FIRE TRUCK)

DRAWING NO:

V-102

\\woodardcurran.net\shared\Projects\0233681.02 scituate ma stearns meadow wtp - design\wp\Drawings\Civil\PERMITTING\0233681.02 V-XXX.dwg, Aug 09, 2023 - 6:43pm MBROWN